ENG: The measurements mentioned in the drawings and in TimberIN websites are only approximate data. They will differ from the measurements of the finished product. It is due to the fact that our products are individually designed and hand-made. However, if one or more measurements are very important, please mention before ordering. We will pay big attention to your requirements in the production process. This will ensure that the product will be produced as closely as possible to your requirements.

DE: Die in den Zeichnungen und auf den TimberIN-Websites genannten Maße sind nur ungefähre Angaben. Sie unterscheiden sich von den Maßen des fertigen Produkts. Dies liegt daran, dass unsere Produkte individuell gestaltet und handgefertigt werden. Wenn jedoch eine oder mehrere Messungen sehr wichtig sind, geben Sie dies bitte vor der Bestellung an. Wir werden Ihre Anforderungen im Produktionsprozess sehr berücksichtigen. Dadurch wird sichergestellt, dass das Produkt so genau wie möglich Ihren Anforderungen entspricht.

FR: Les mesures mentionnées dans les dessins et sur les sites Web TimberIN ne sont que des données approximatives. Ils différeront des mesures du produit fini. Cela est dû au fait que nos produits sont conçus individuellement et fabriqués à la main. Cependant, si une ou plusieurs mesures sont très importantes, merci de le mentionner avant de commander. Nous prêterons une grande attention à vos besoins dans le processus de production. Cela garantira que le produit sera fabriqué aussi près que possible de vos besoins.

DK: Målingerne nævnt på tegningerne og på TimberIN-websteder er kun omtrentlige data. De afviger fra målingerne af det færdige produkt. Det skyldes, at vores produkter er individuelt designet og håndlavet. Hvis en eller flere målinger dog er meget vigtige, skal du nævne det før du bestiller. Vi vil være meget opmærksomme på dine krav i produktionsprocessen. Dette vil sikre, at produktet produceres så tæt som muligt efter dine krav.

NO: Målingene nevnt på tegningene og på TimberIN nettsteder er bare omtrentlige data. De vil avvike fra målingene av det ferdige produktet. Det skyldes det faktum at produktene våre er individuelt designet og håndlaget. Imidlertid, hvis en eller flere målinger er veldig viktige, må du nevne før du bestiller. Vi vil ta stor vekt på dine krav i produksjonsprosessen. Dette vil sikre at produktet blir produsert så nært som mulig dine behov.

IT: Le misure menzionate nei disegni e nei siti Web di TimberIN sono solo dati approssimativi. Differiranno dalle misure del prodotto finito. È dovuto al fatto che i nostri prodotti sono progettati e realizzati a mano individualmente. Tuttavia, se una o più misurazioni sono molto importanti, si prega di menzionare prima di ordinare. Presteremo grande attenzione alle vostre esigenze nel processo di produzione. Ciò garantirà che il prodotto sarà prodotto il più vicino possibile alle vostre esigenze.

NL: De in de tekeningen en op TimberIN-websites genoemde metingen zijn slechts benaderende gegevens. Ze zullen verschillen van de afmetingen van het eindproduct. Het is te wijten aan het feit dat onze producten individueel zijn ontworpen en met de hand zijn gemaakt. Als een of meer metingen erg belangrijk zijn, vermeld dit dan voordat u bestelt. We zullen veel aandacht besteden aan uw eisen in het productieproces. Dit zorgt ervoor dat het product zo dicht mogelijk bij uw eisen wordt geproduceerd.

SWE: Mätningarna som nämns på ritningarna och på TimberIN-webbplatser är endast ungefärliga data. De kommer att skilja sig från måtten på den färdiga produkten. Det beror på att våra produkter är individuellt designade och handgjorda. Om en eller flera mätningar är mycket viktiga, berätta dock innan du beställer. Vi kommer att ägna stor uppmärksamhet åt dina krav i produktionsprocessen. Detta kommer att säkerställa att produkten produceras så nära dina krav som möjligt.

PL: Pomiary wymienione na rysunkach i na stronach internetowych TimberIN są jedynie danymi przybliżonymi. Będą się różnić od pomiarów gotowego produktu. Wynika to z faktu, że nasze produkty są indywidualnie zaprojektowane i wykonane ręcznie. Jeśli jednak co najmniej jeden pomiar jest bardzo ważny, należy o tym wspomnieć przed złożeniem zamówienia. Zwrócimy dużą uwagę na Twoje wymagania w procesie produkcyjnym. Zapewni to, że produkt będzie produkowany jak najbliżej Twoich wymagań.

IGLOO OUTDOOR GARDEN SAUNA
TECHNICAL SHEET

TimberIN
BALTIC SPA & SAUNAS

Table of contents

2000 MM IGLOO SAUNA 3
3000 MM IGLOO SAUNA 7
4000 MM IGLOO SAUNA 12
5000 MM IGLOO SAUNA 17
WOOD BURNING HARVIA HEATERS 22
WOOD BURNING HARVIA HEATER SAFETY DISTANCES APPLIED IN TIMBERIN SAUNAS 23
ELECTRIC HARVIA HEATERS 24
CROSS SECTION OF THE CONSTRUCTION 25
PANORAMIC WINDOW TYPES 26
STANDARD WINDOW 26
PANORAMIC WINDOW (GLASS AREA 50%) 27
..... 27
PANORAMIC WINDOW (GLASS AREA 80%) 28
PANORAMIC WINDOW (GLASS AREA 100%) 29

2000 MM IGLOO SAUNA

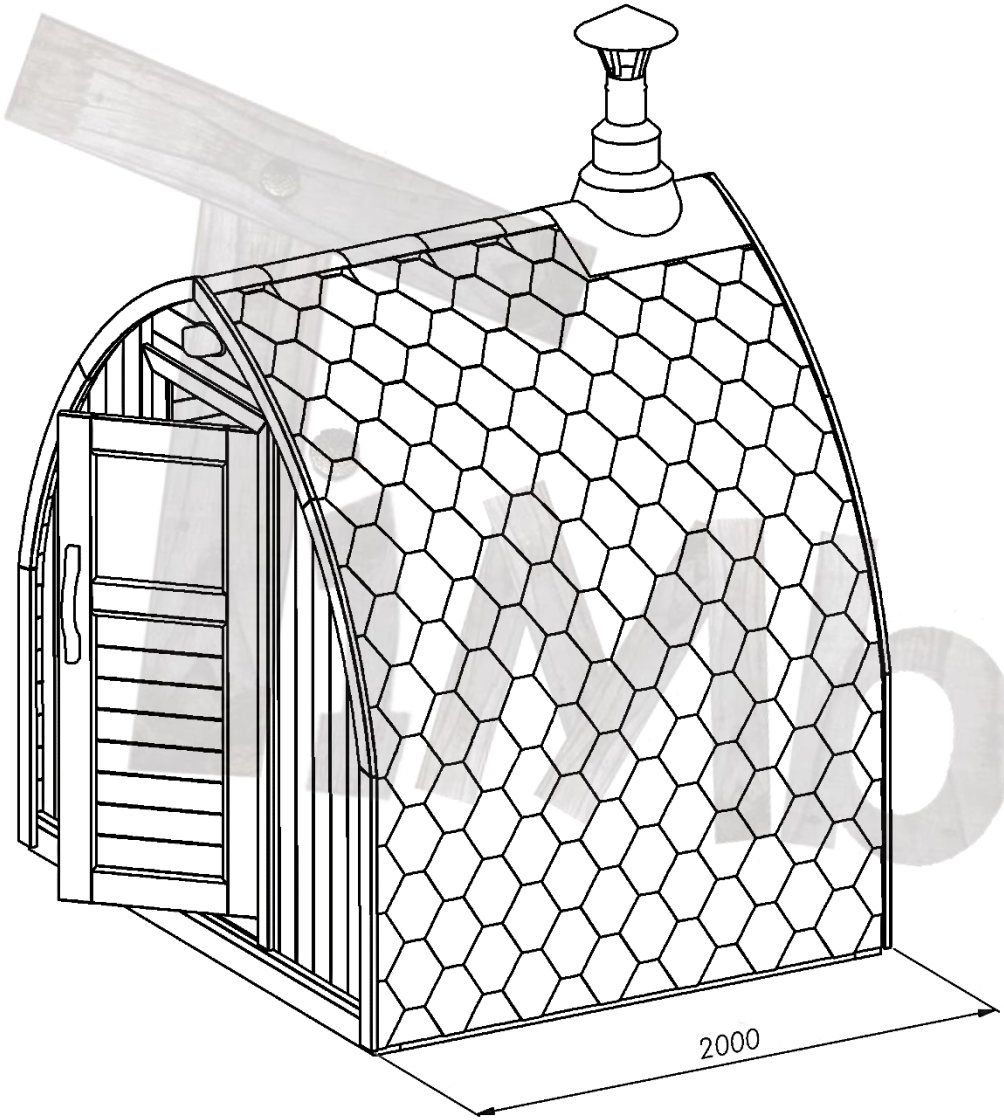

MODEL	2000 MM IGLOO
Seating capacity	2 - 4
Length	2000 mm
Height (without chimney)	2500 mm
Width	2350 mm
Weight	~800 kg
Wood type	Spruce Thermowood
Recommended official "Harvia" heater	Harvia M3 Harvia M3 SL Harvia Cilindro 9 kW

3D view of this model

INTERIOR LAYOUT

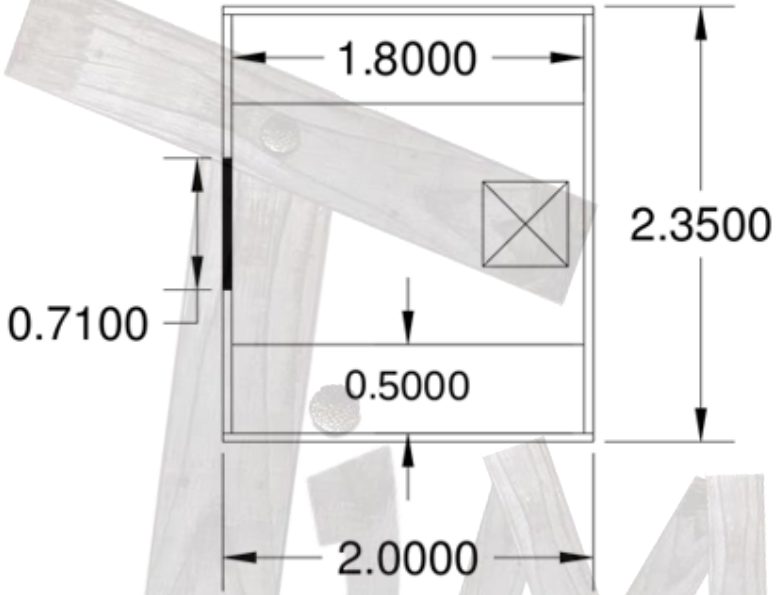

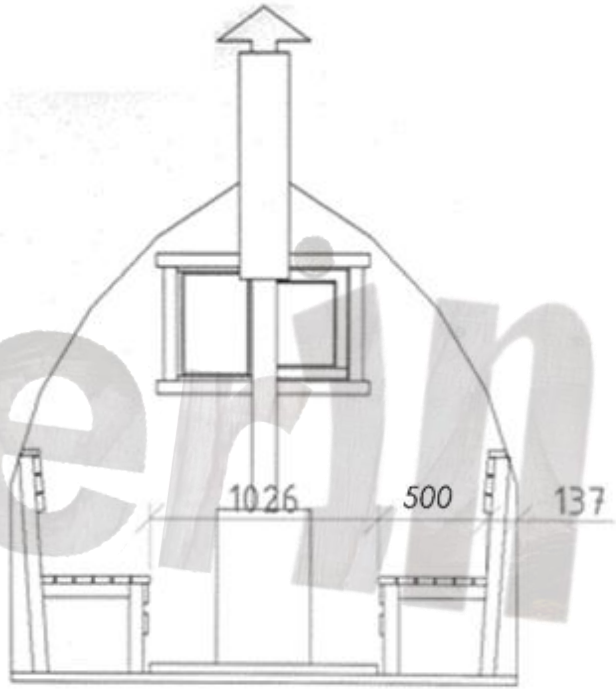

MODEL – IGLOO	INTERIOR LAYOUT of not insulated sauna
Length outside	2000 mm
Length inside	1800 mm
Width outside	2350 mm
Door width	710 mm
Width of the benches	500 mm

BASE MEASUREMENTS

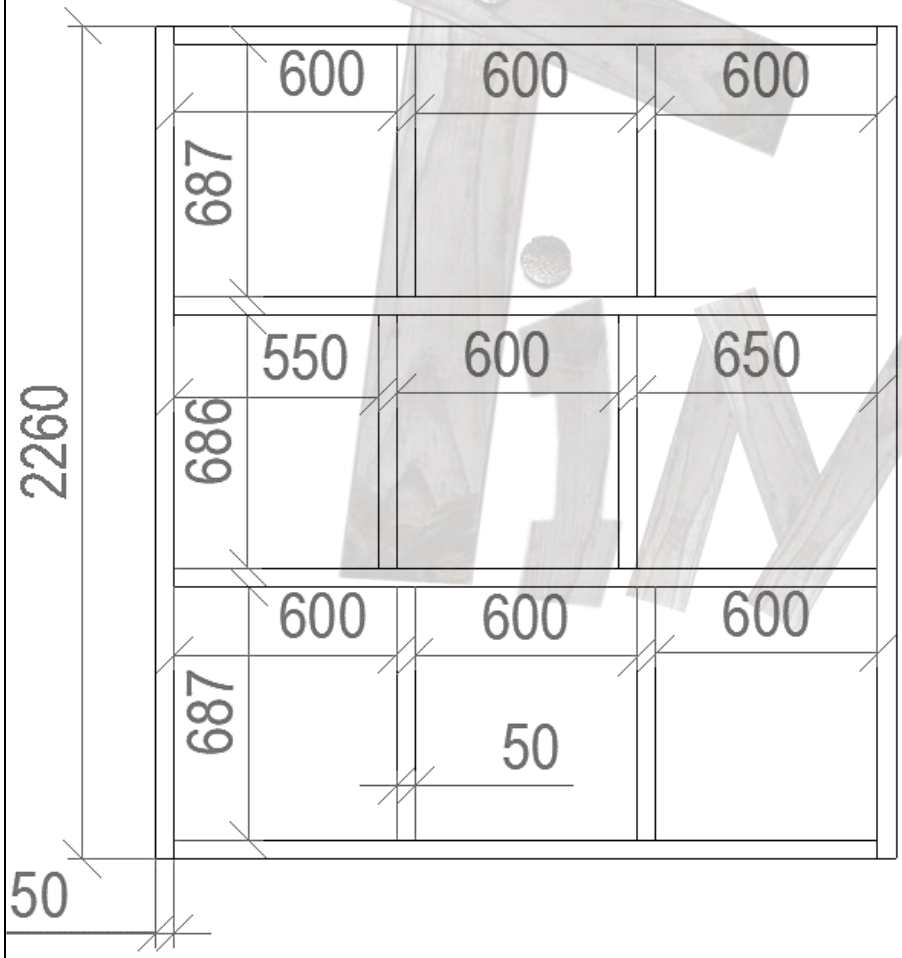

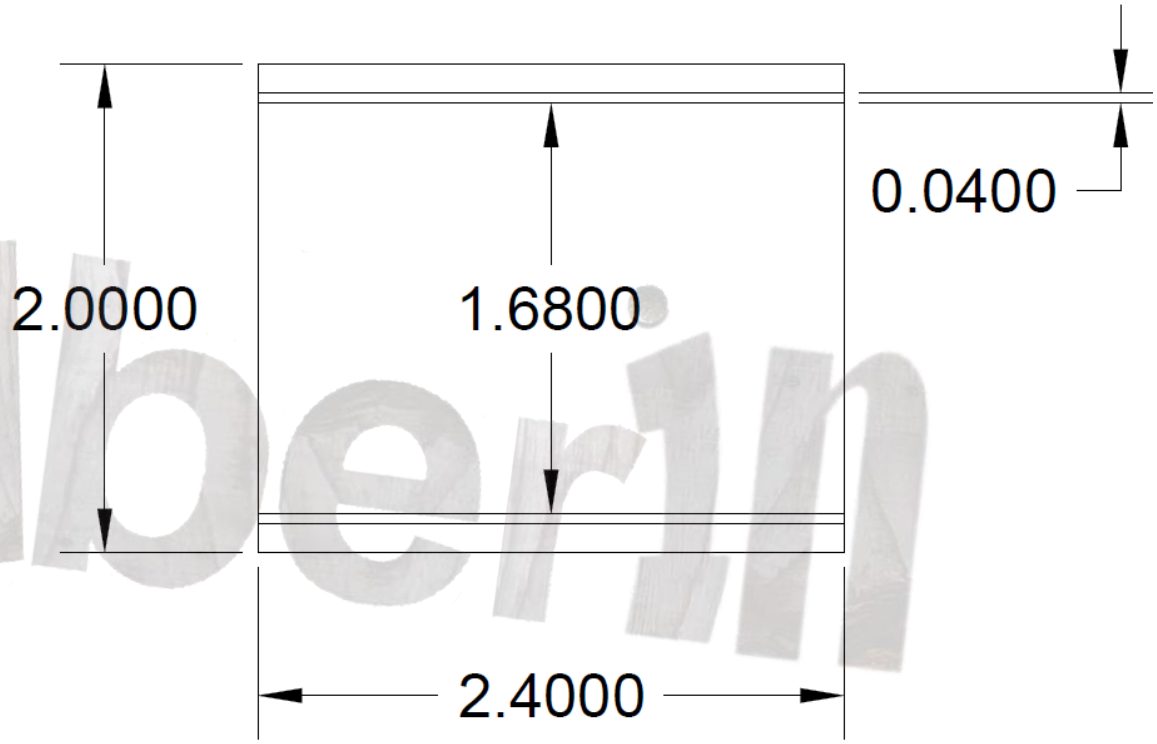

Please note that the base of the sauna may differ depending on the type of construction.

If that makes any influence on your order, please contact us separately and we will give all required information

DELIVERY INFO

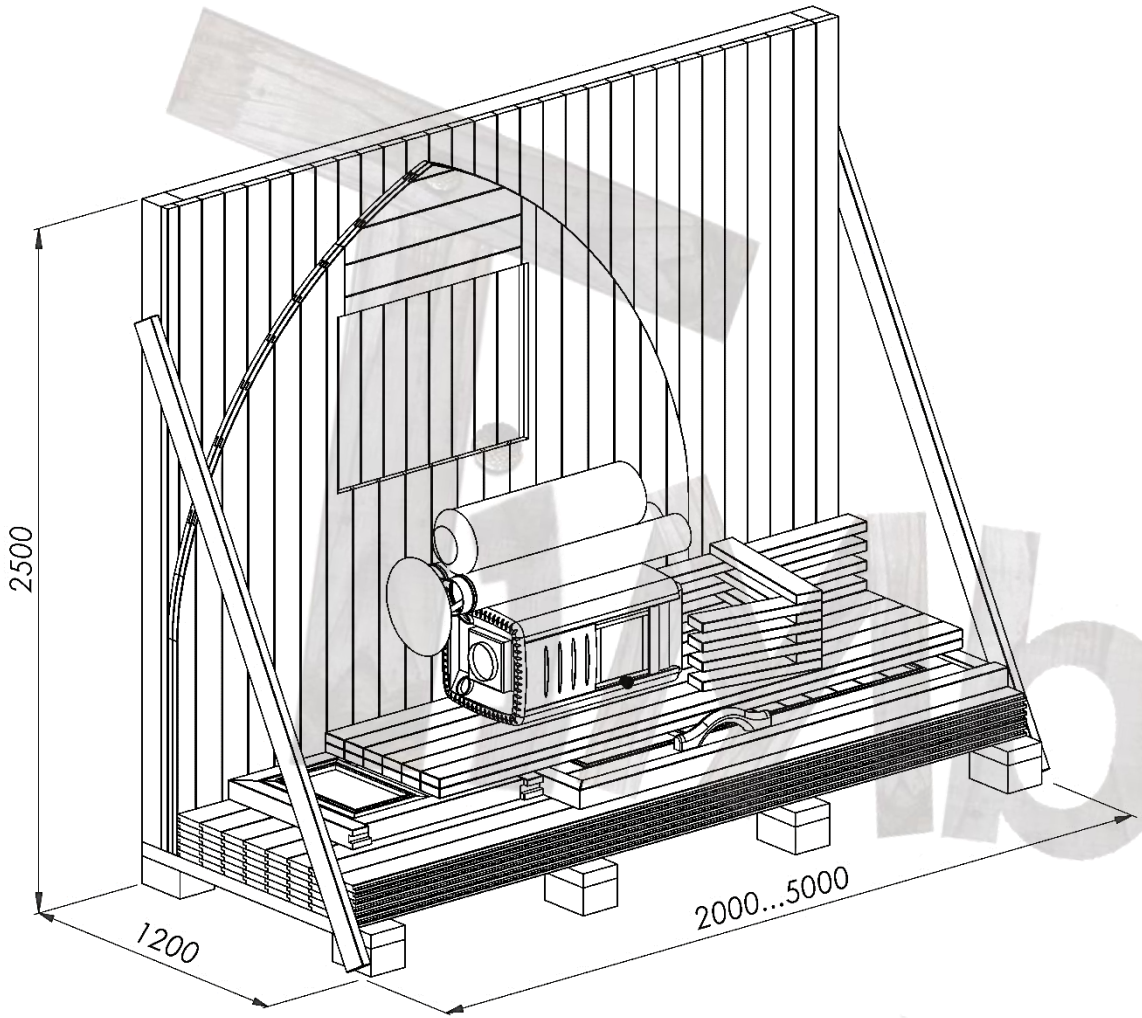

MODEL 2000 MM IGLOO	DELIVERY INFO
Assembly kit (flat packed) sauna measurements	Height: 2500 mm Width: 1200 mm Length: 2000 mm Weight ~800 kg
Assembled sauna measurements	Height: 2500 mm Width: 2400 mm Length: 2080 mm Weight ~800 kg

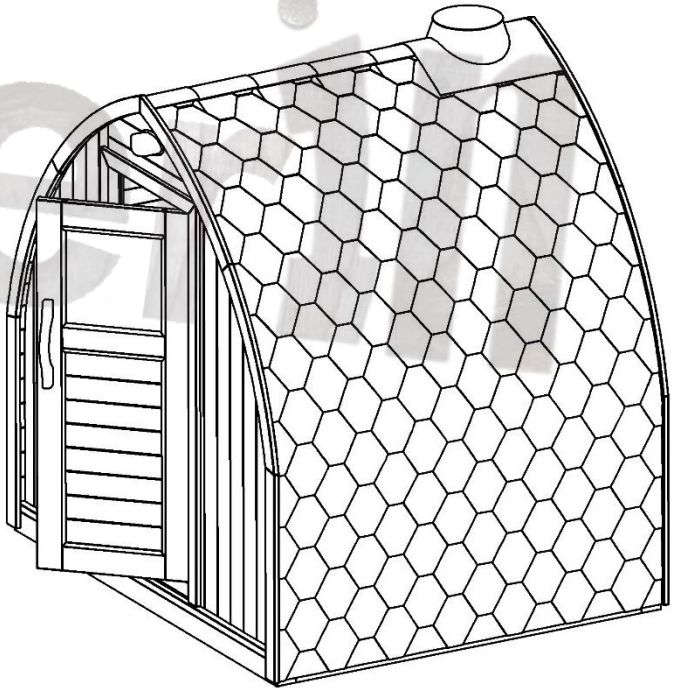

3000 MM IGLOO SAUNA

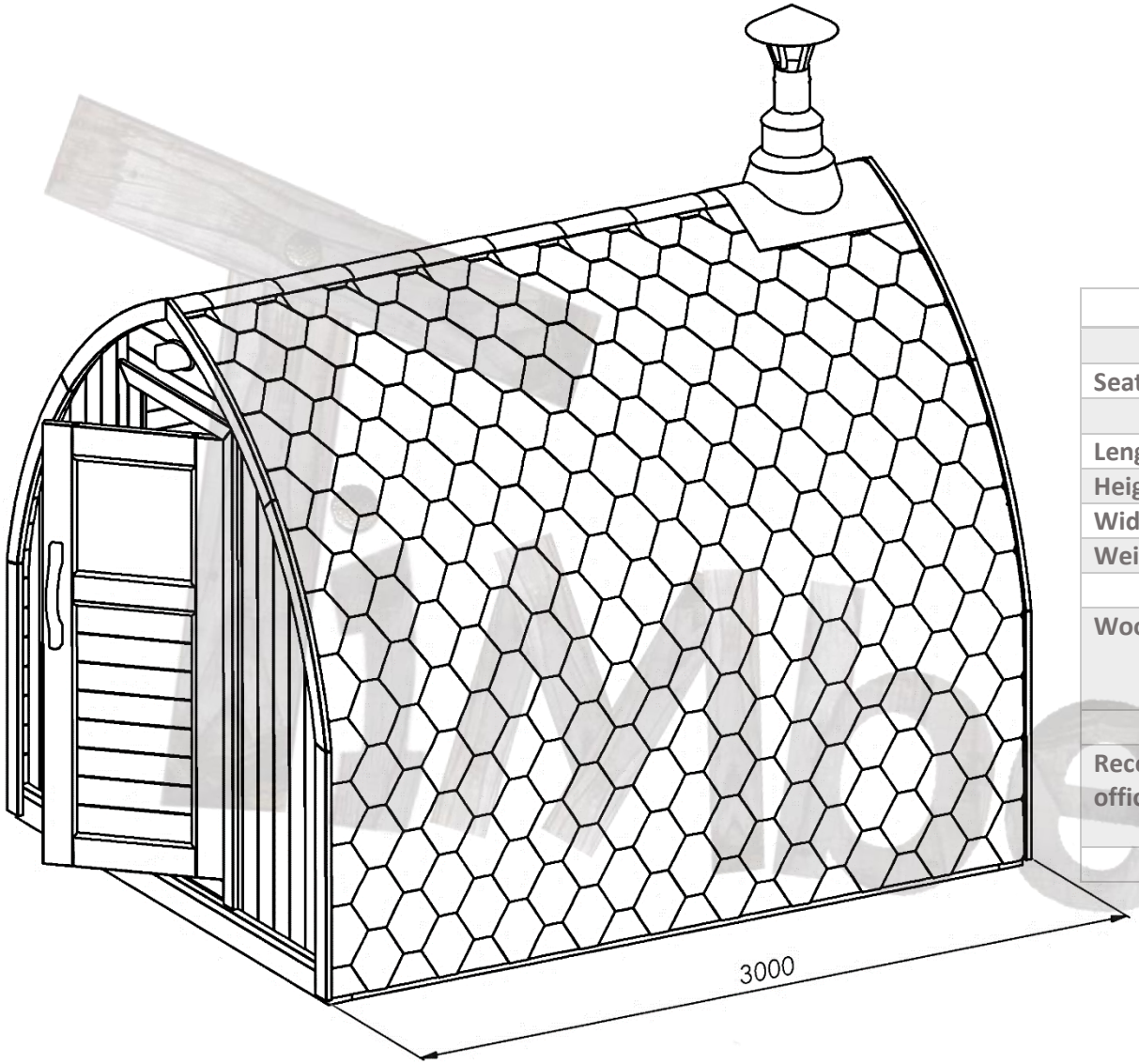

MODEL	3000 MM IGLOO
Seating capacity	4 - 6
Length	3000 mm
Height (without chimney)	2500 mm
Width	2350 mm
Weight	~1100 kg
Wood type	Spruce Thermowood
Recommended official “Harvia” heater	Harvia M3 Harvia M3 SL Harvia Cilindro 9 kW

3D view of this model

INTERIOR LAYOUT (1)

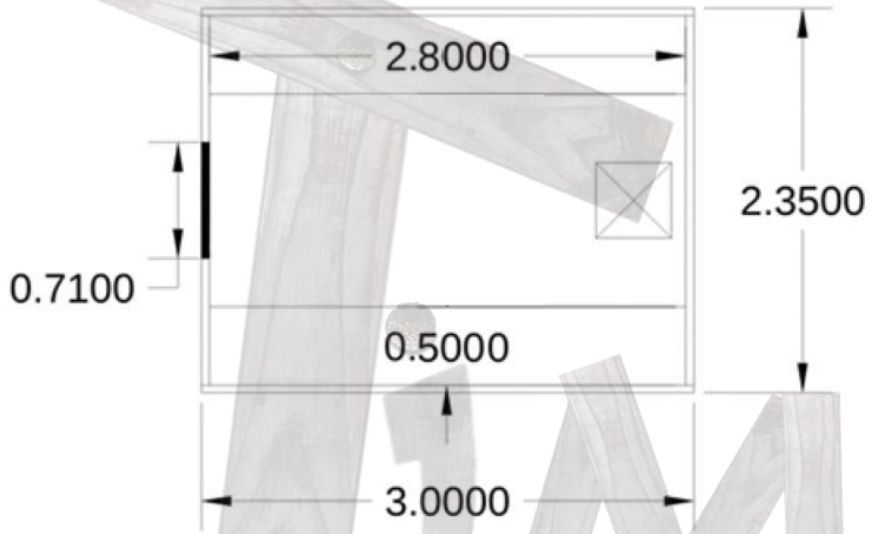

MODEL – IGLOO	INTERIOR LAYOUT of not insulated sauna
Length outside	3000 mm
Length inside	2800 mm
Width outside	2350 mm
Door width	710 mm
Width of the benches	500 mm

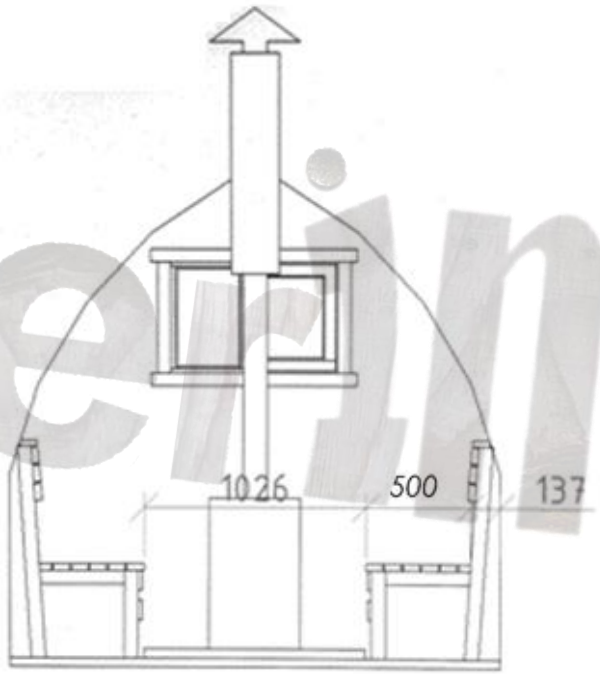

INTERIOR LAYOUT (2)

of not insulated sauna

1m dressing room + 2m sauna

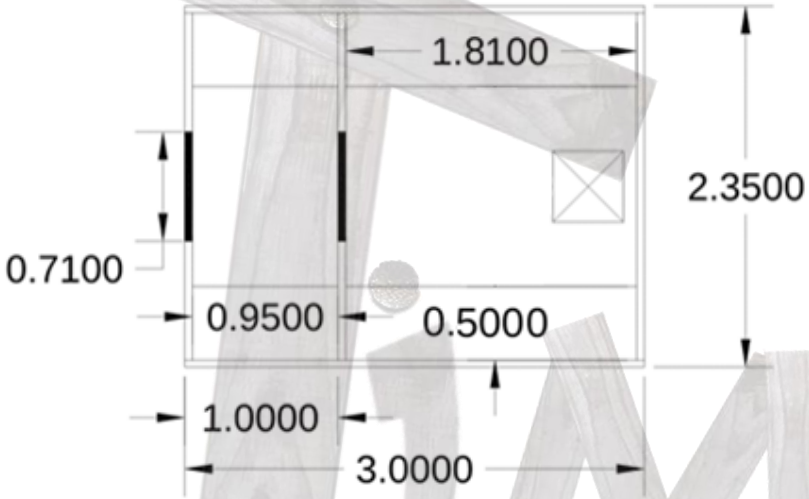

1m terrace + 2m sauna

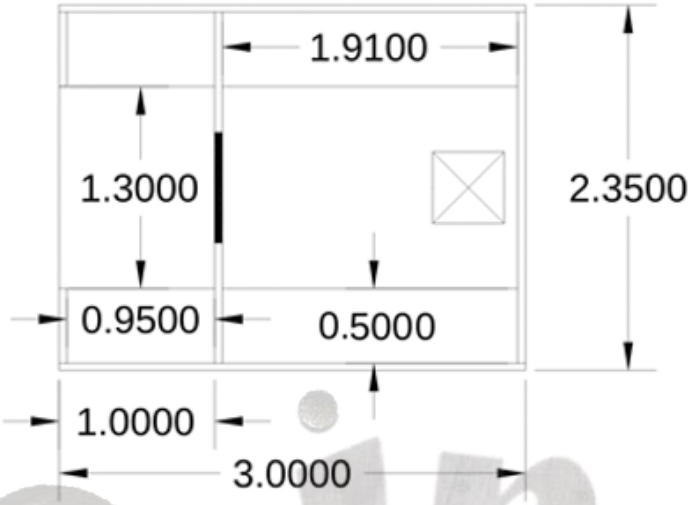

iMberin

BASE MEASUREMENTS

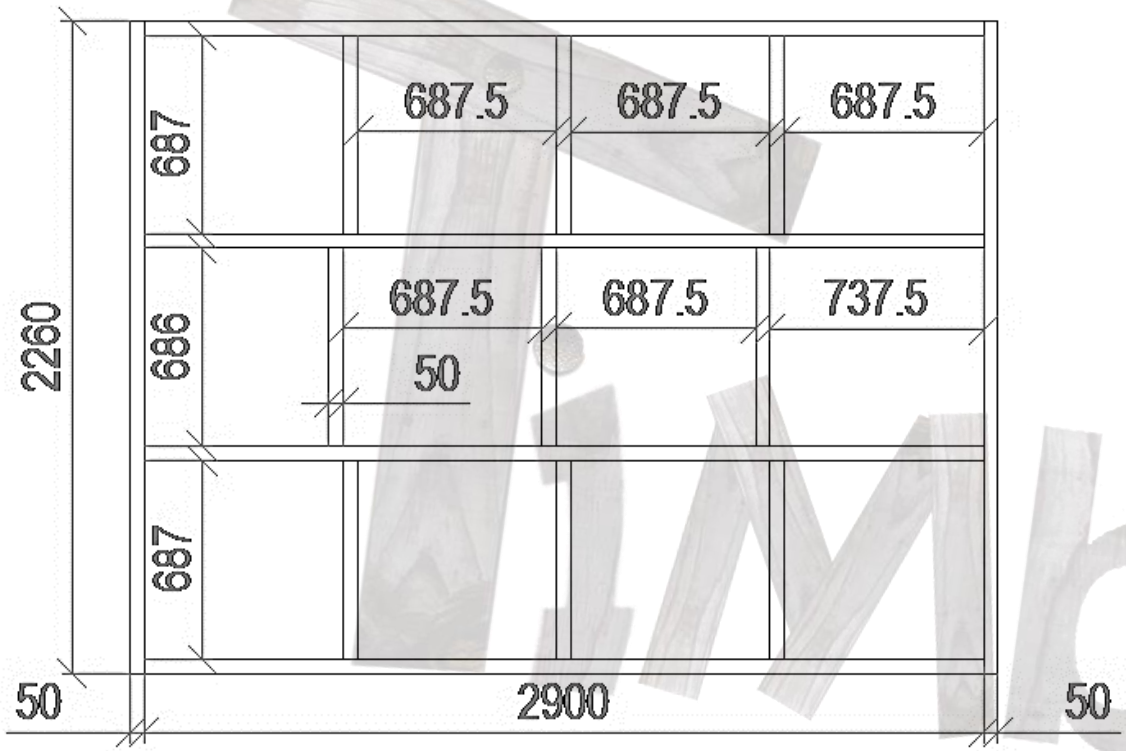

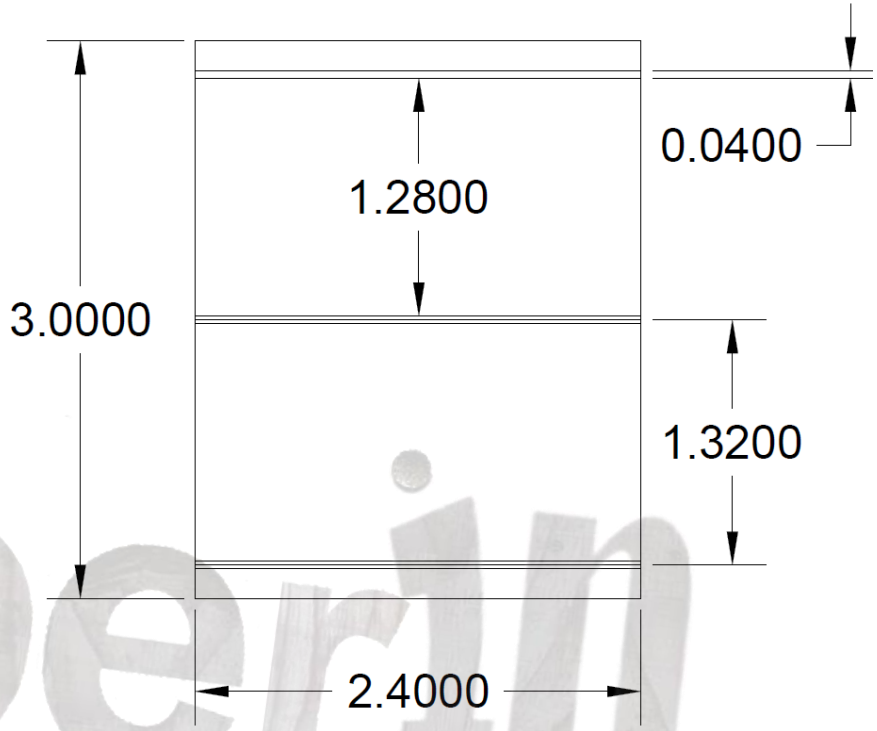

Please note that the base of the sauna may differ depending on the type of construction.

If that makes any influence on your order, please contact us separately and we will give all required information

DELIVERY INFO

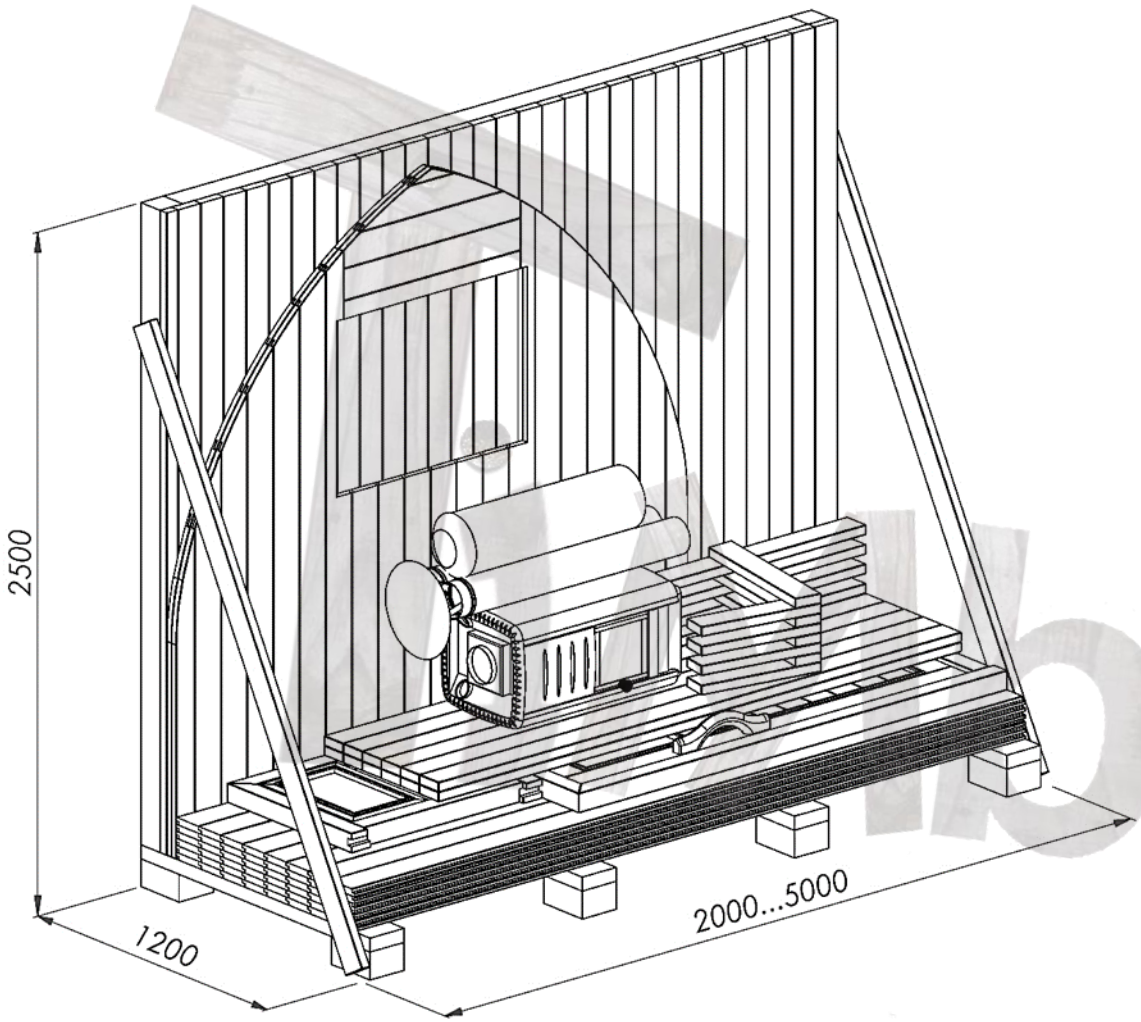

MODEL 3000 MM IGLOO	DELIVERY INFO
Assembly kit (flat packed) sauna measurements	Height: 2500 mm Width: 1200 mm Length: 3000 mm Weight ~1100 kg
Assembled sauna measurements	Height: 2500 mm Width: 2400 mm Length: 3080 mm Weight ~1100 kg

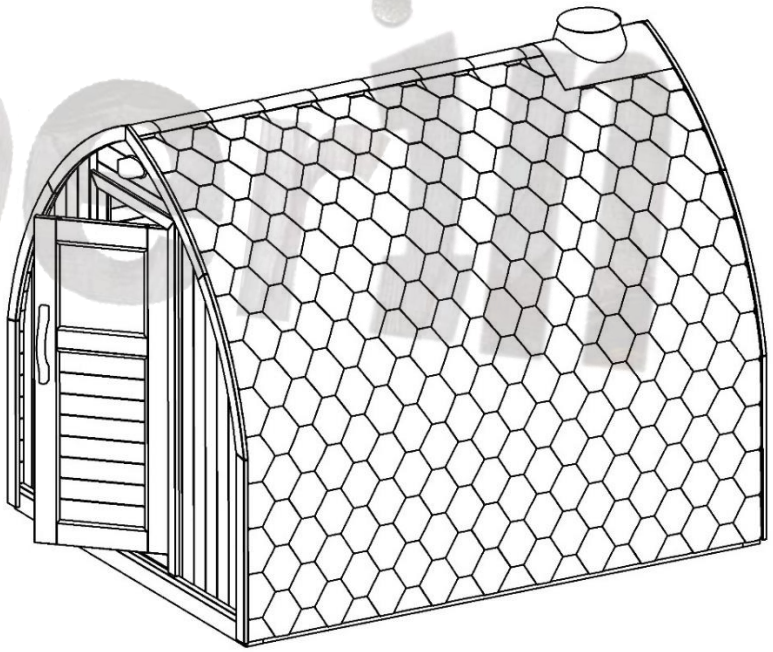

4000 MM IGLOO SAUNA

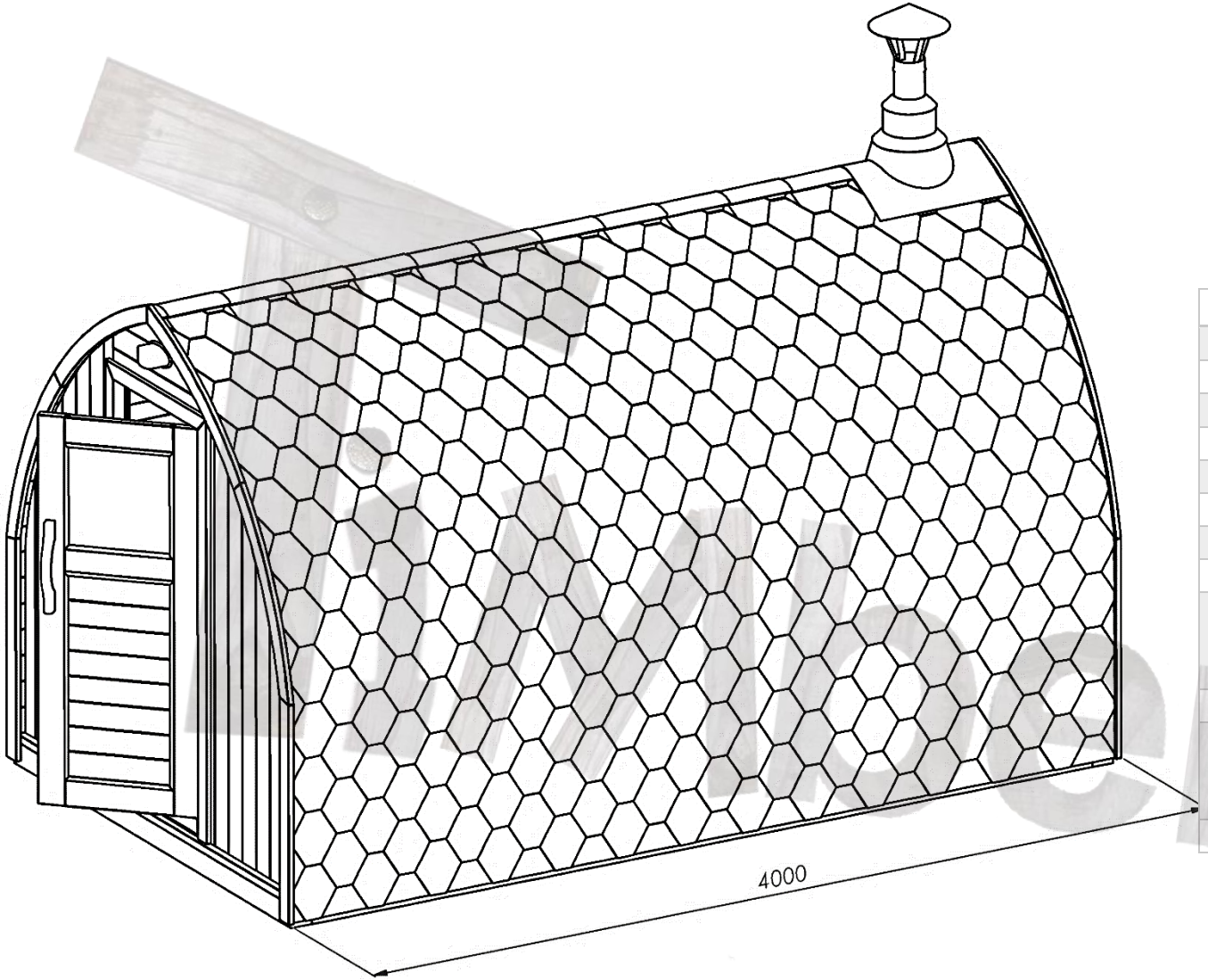

MODEL	4000 MM IGLOO
Seating capacity	6 - 8
Length	4000 mm
Height (without chimney)	2500 mm
Width	2350 mm
Weight	~1400 kg
Wood type	Spruce Thermowood
Recommended official “Harvia” heater	Harvia 20 PRO Harvia 20 SL Legend 10.8 kW

3D view of this model

INTERIOR LAYOUT (1)

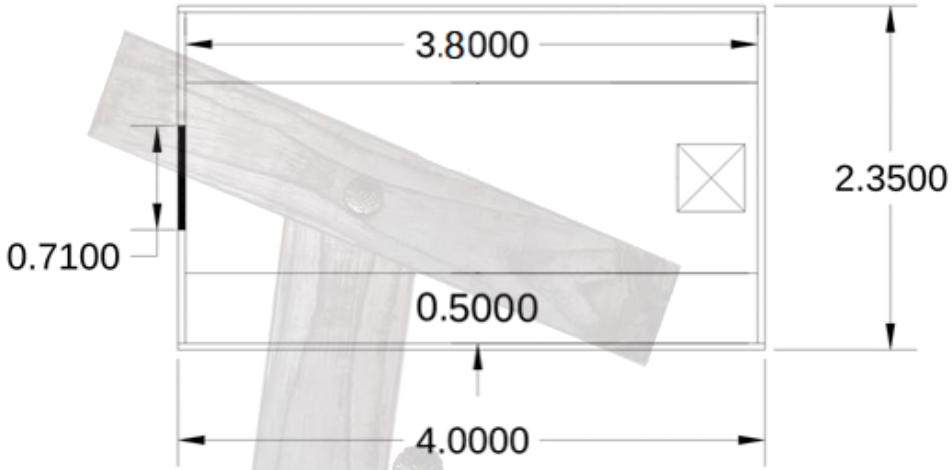

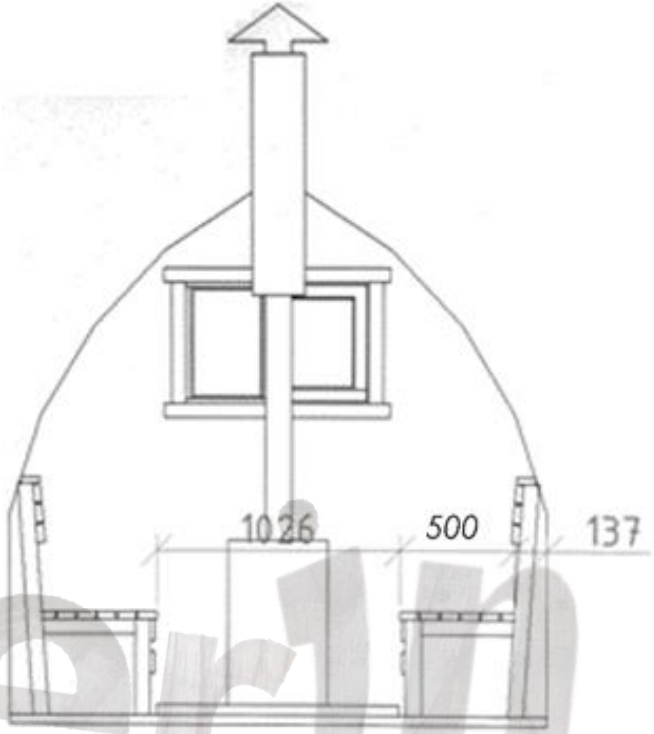

MODEL – IGLOO	INTERIOR LAYOUT of not insulated sauna
Length outside	4000 mm
Length inside	3800 mm
Width outside	2350 mm
Door width	710 mm
Width of the benches	500 mm

timberin

INTERIOR LAYOUT (2)

of not insulated sauna

1 m dressing room + 3 m sauna

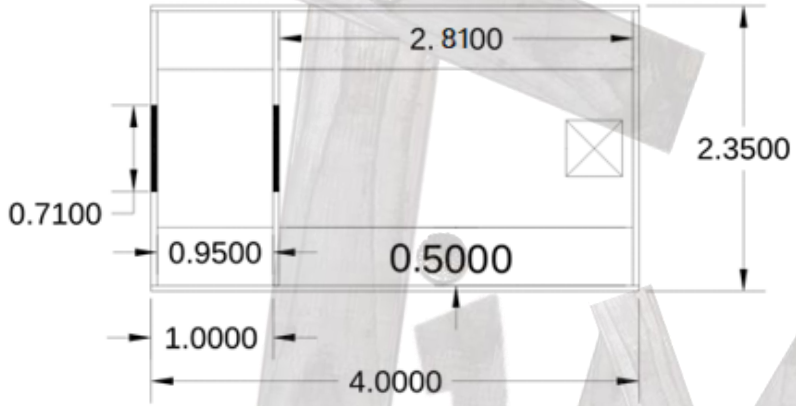

1 m terrace + 3 m sauna

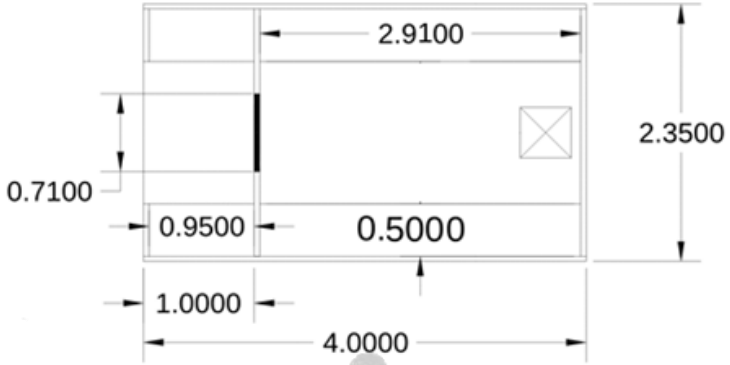

1,5 m dressing room + 2,5 m sauna

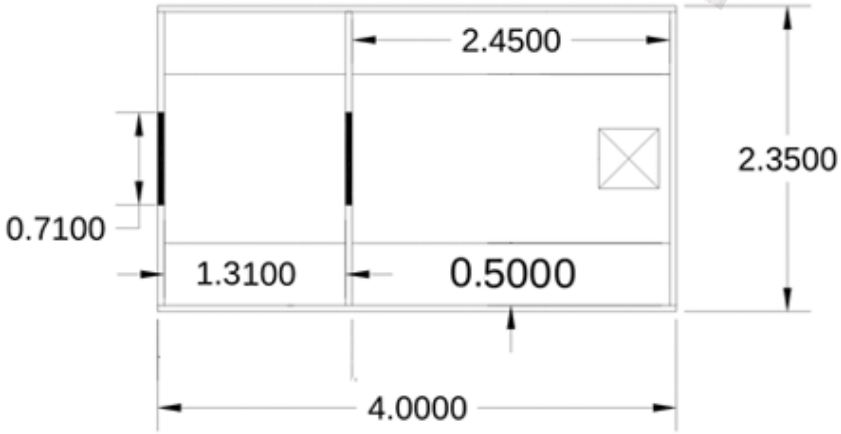

1 m terrace + 1 m dressing room + 2 m sauna

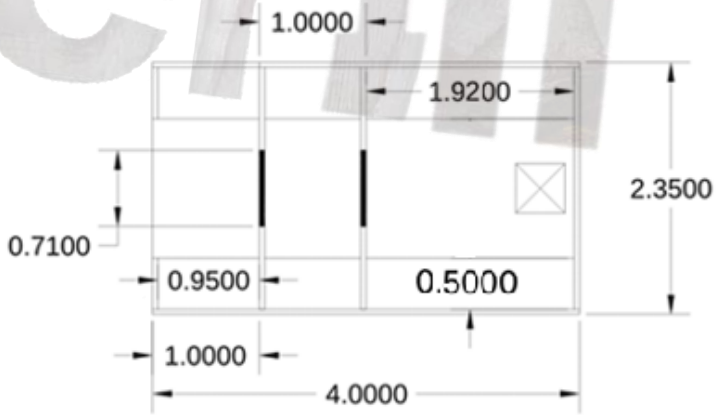

timberin

BASE MEASUREMENTS

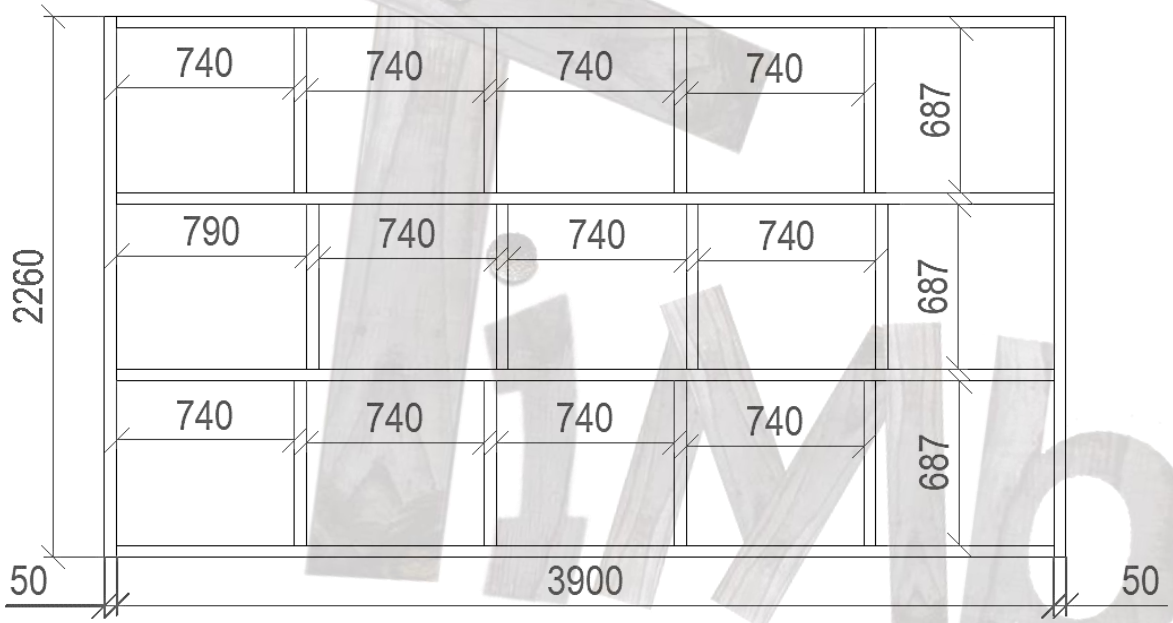

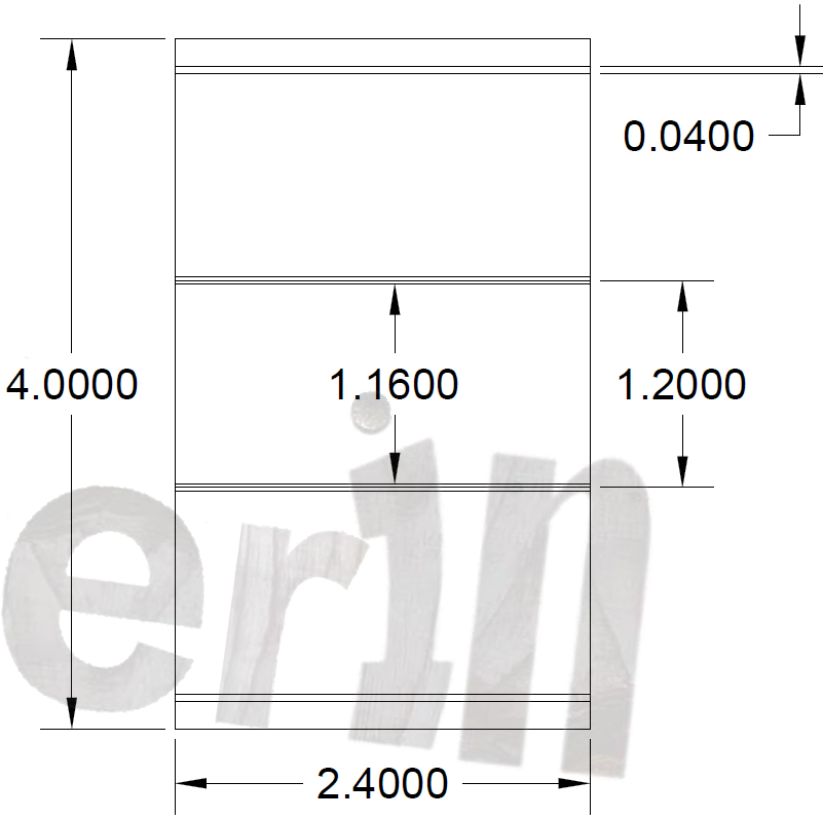

Please note that the base of the sauna may differ depending on the type of construction.

If that makes any influence on your order, please contact us separately and we will give all required information

DELIVERY INFO

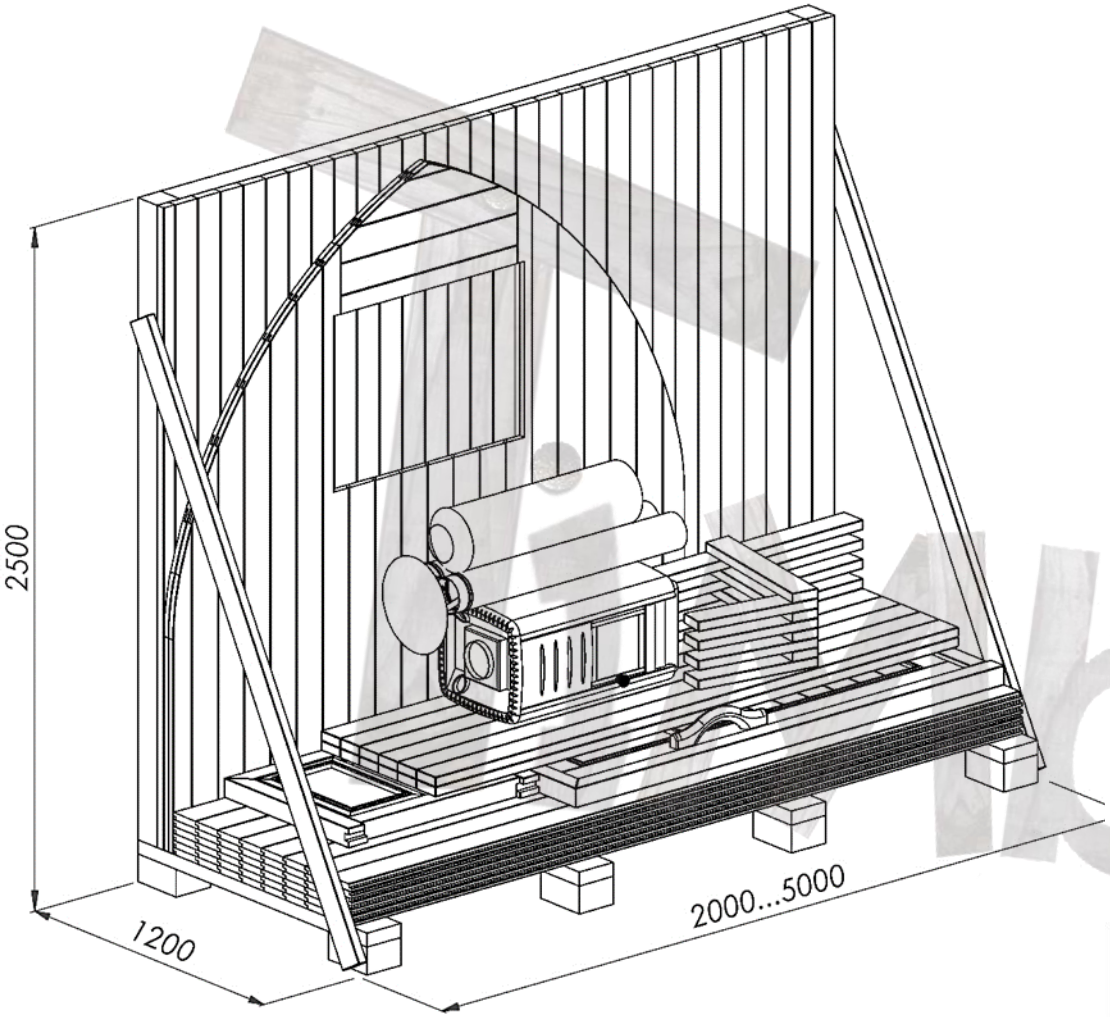

MODEL 4000 MM IGLOO	DELIVERY INFO
Assembly kit (flat packed) sauna measurements	Height: 2500 mm Width: 1200 mm Length: 4000 mm Weight ~1400 kg
Assembled sauna measurements	Height: 2500 mm Width: 2400 mm Length: 4080 mm Weight ~1400 kg

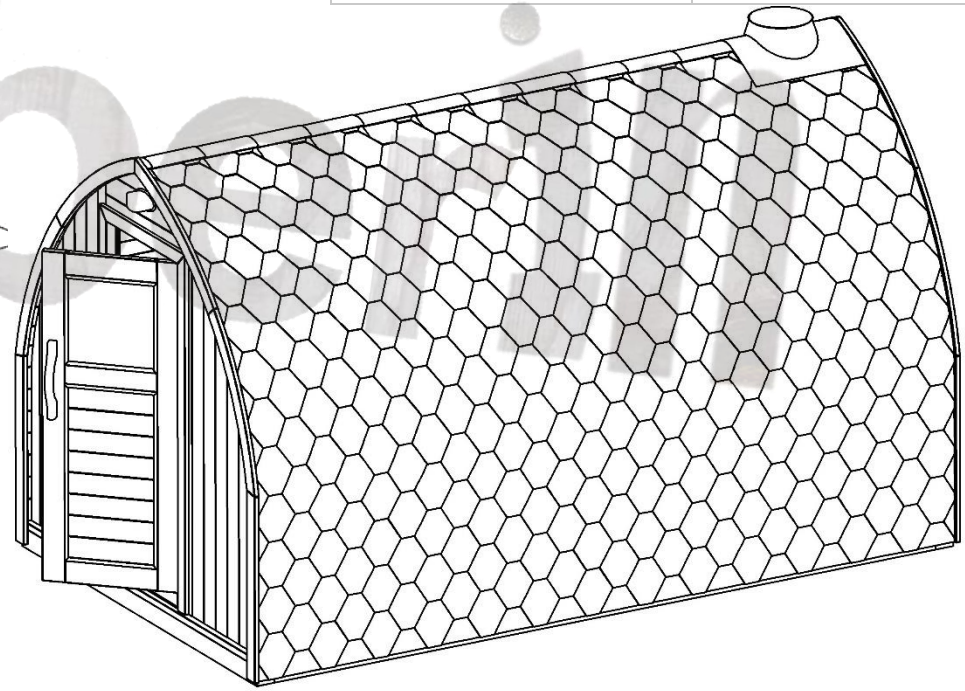

5000 MM IGLOO SAUNA

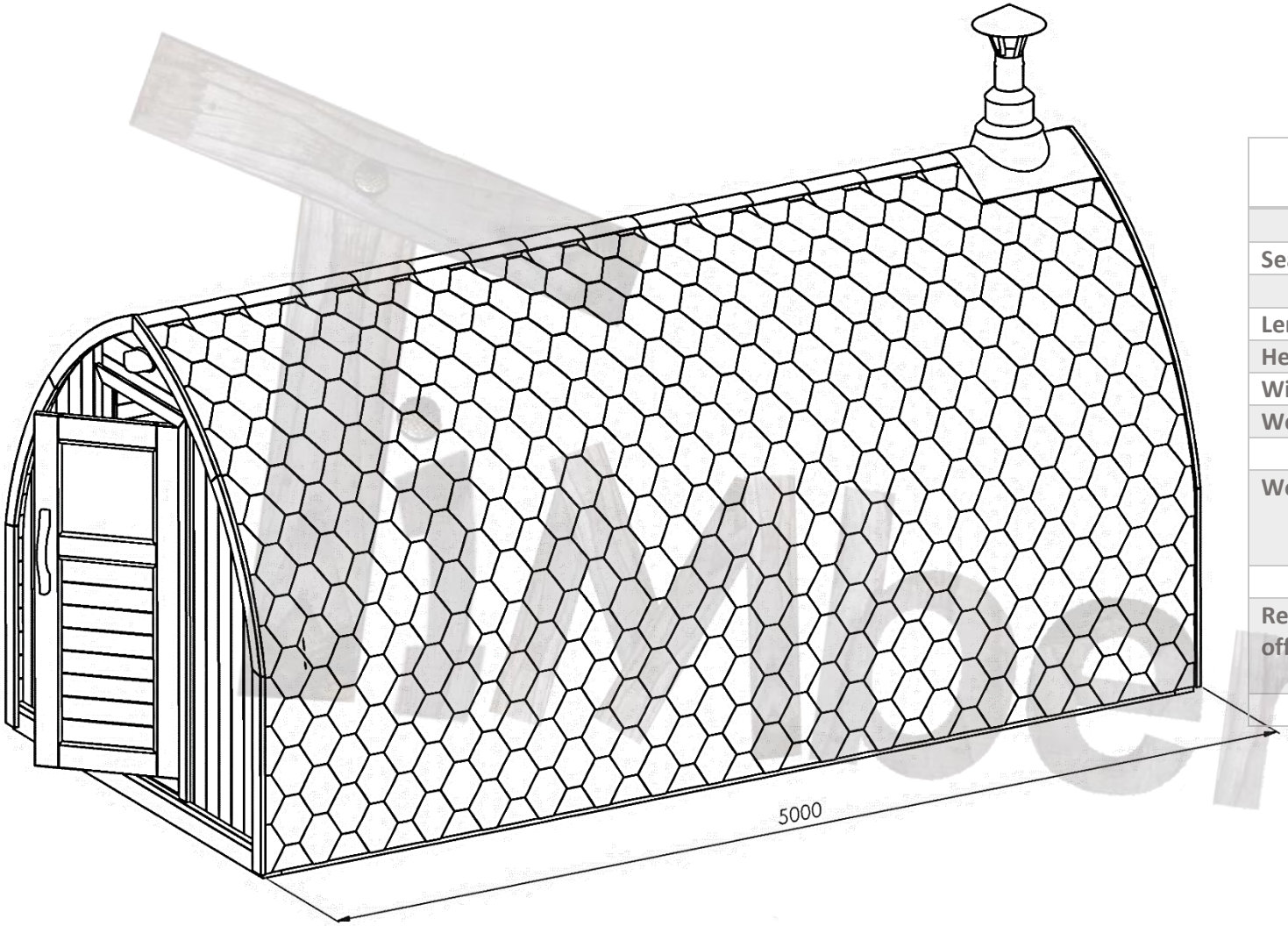

MODEL	5000 MM IGLOO
Seating capacity	8 - 10
Length	5000 mm
Height (without chimney)	2500 mm
Width	2350 mm
Weight	~1700 kg
Wood type	Spruce Thermowood
Recommended official “Harvia” heater	Harvia 20 PRO Harvia 20 SL Legend 10.8 kW

3D view of this model

INTERIOR LAYOUT (1)

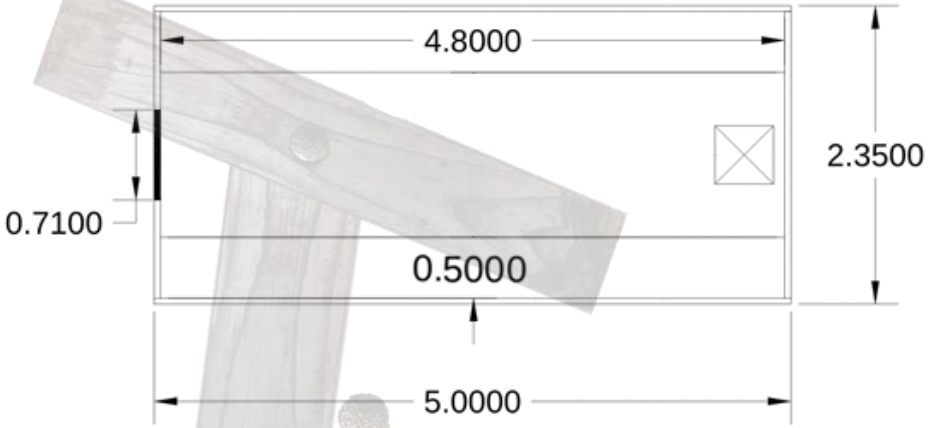

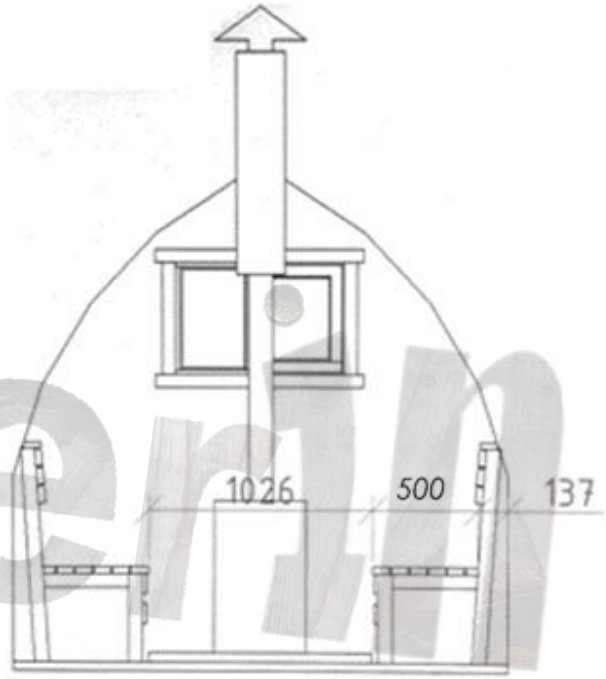

MODEL – IGLOO	INTERIOR LAYOUT of not insulated sauna
Length outside	5000 mm
Length inside	4800 mm
Width outside	2350 mm
Door width	710 mm
Width of the benches	500 mm

INTERIOR LAYOUT (2)

of not insulated sauna

1 m dressing room + 4 m sauna

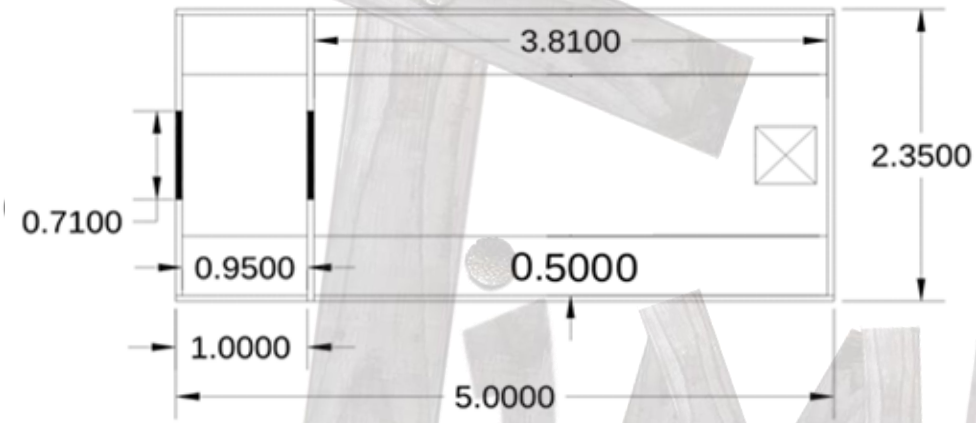

1 m terrace + 4 m sauna

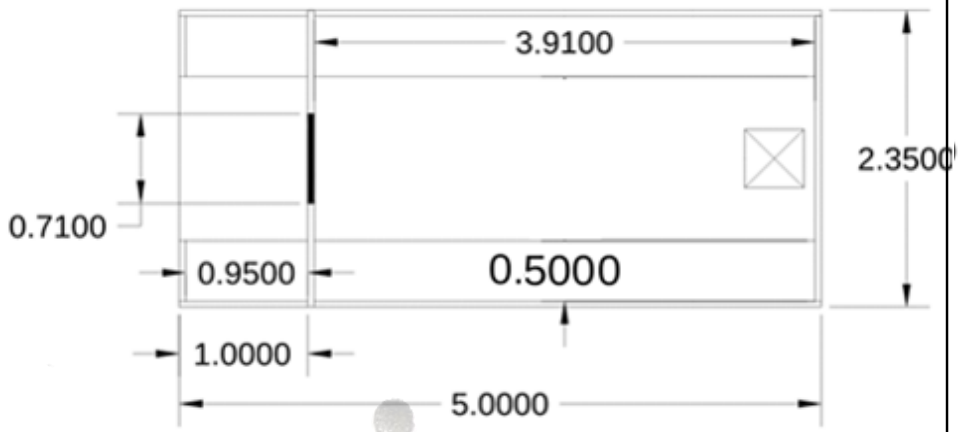

1,5 m dressing room + 3,5 m sauna

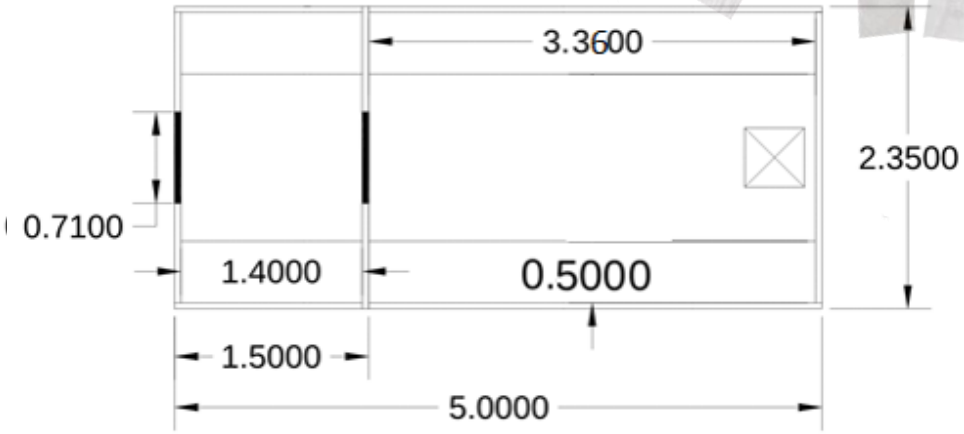

1 m terrace + 1 m dressing room + 3 m sauna

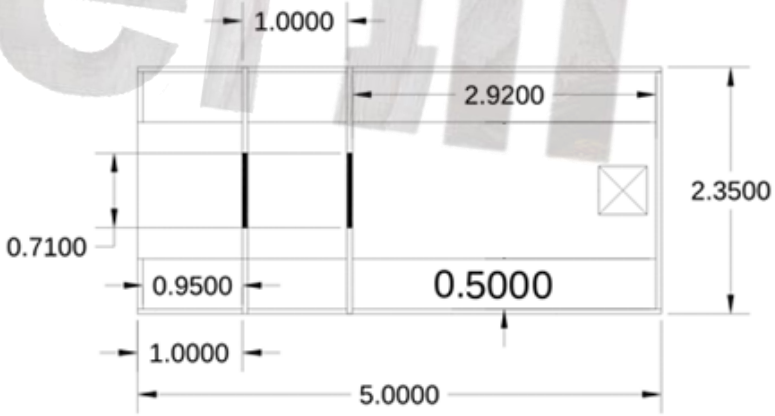

Timberin

BASE MEASUREMENTS

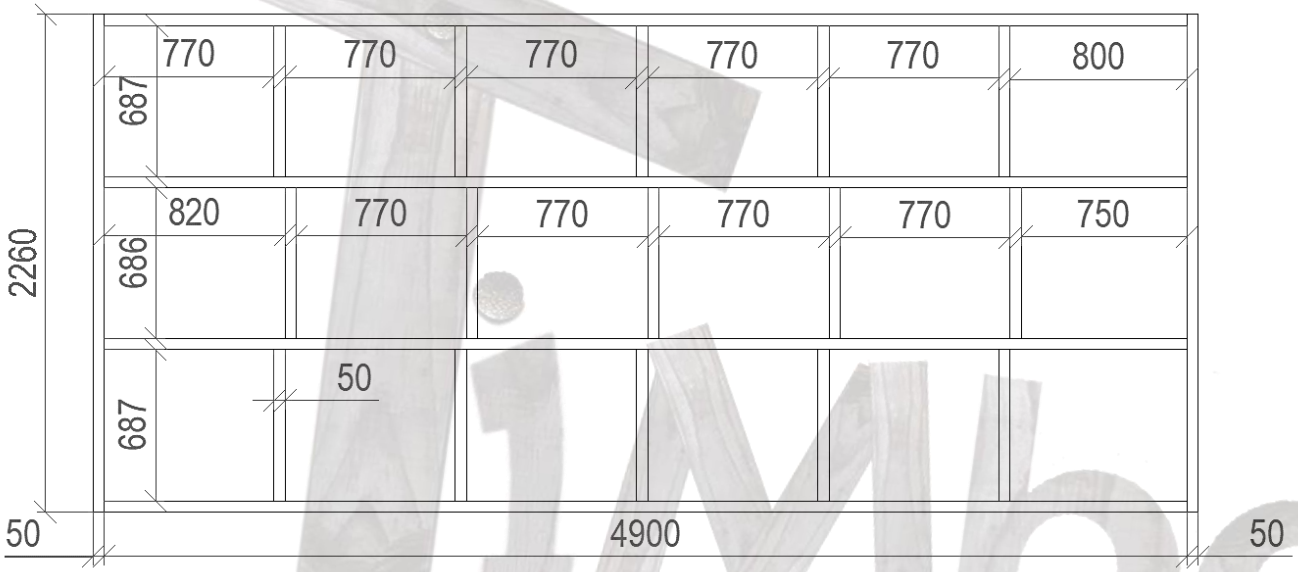

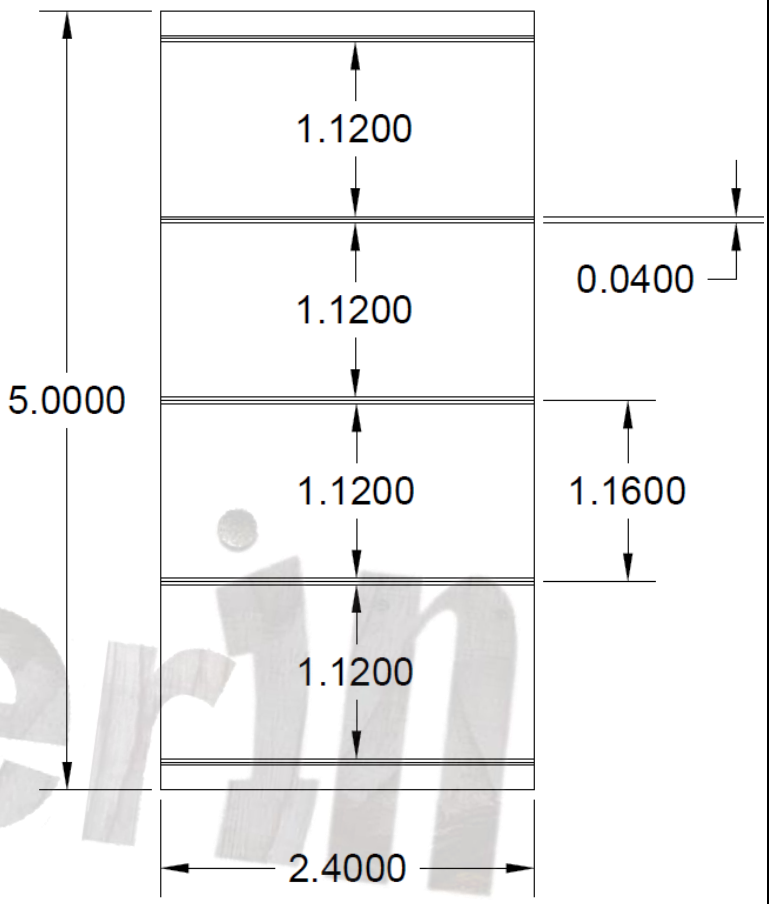

Please note that the base of the sauna may differ depending on the type of construction.

If that makes any influence on your order, please contact us separately and we will give all required information

DELIVERY INFO

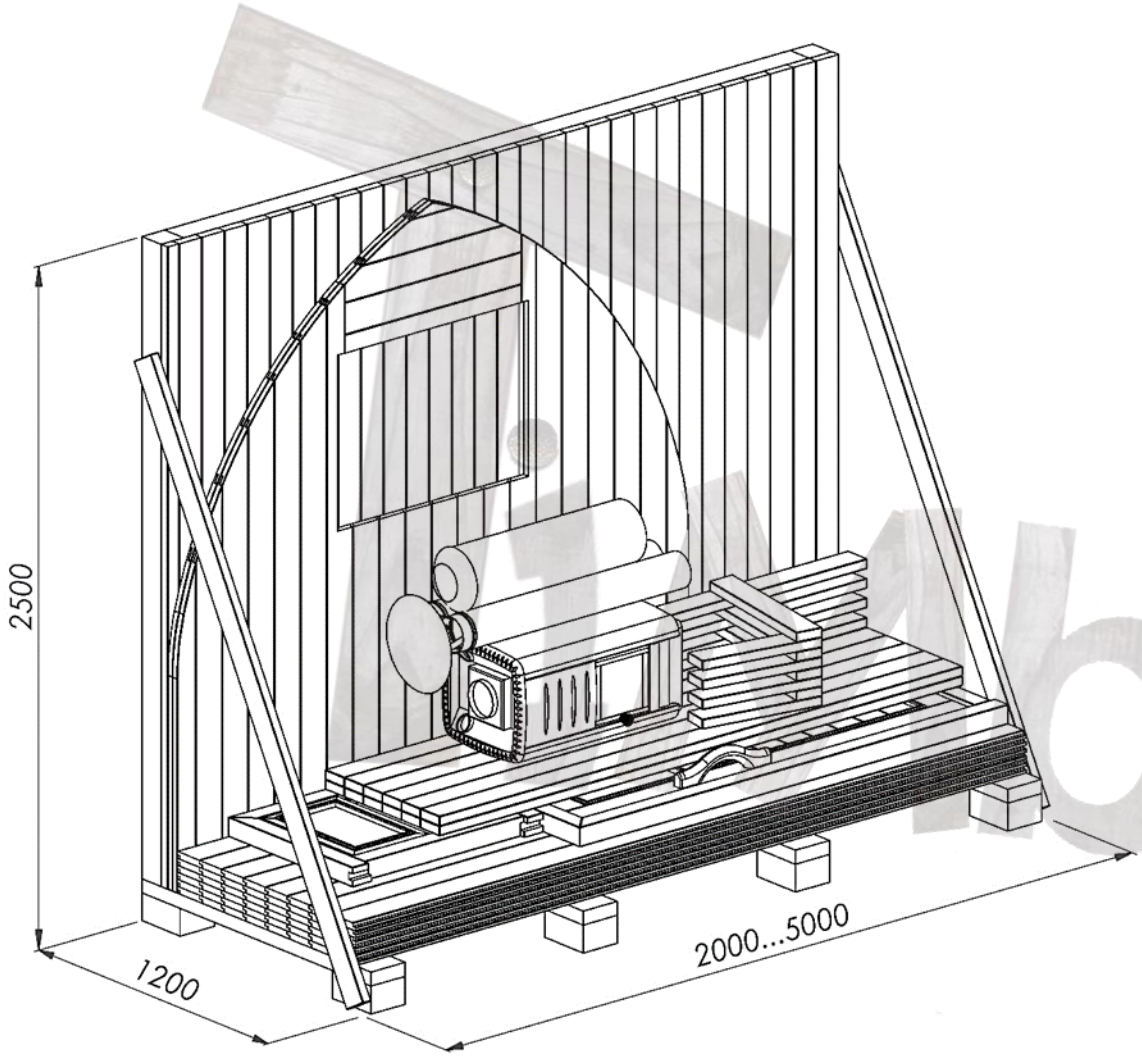

MODEL 5000 MM IGLOO	DELIVERY INFO
Assembly kit (flat packed) sauna measurements	Height: 2500 mm Width: 1200 mm Length: 5000 mm Weight ~1700 kg
Assembled sauna measurements	Height: 2500 mm Width: 2400 mm Length: 5080 mm Weight ~1700 kg

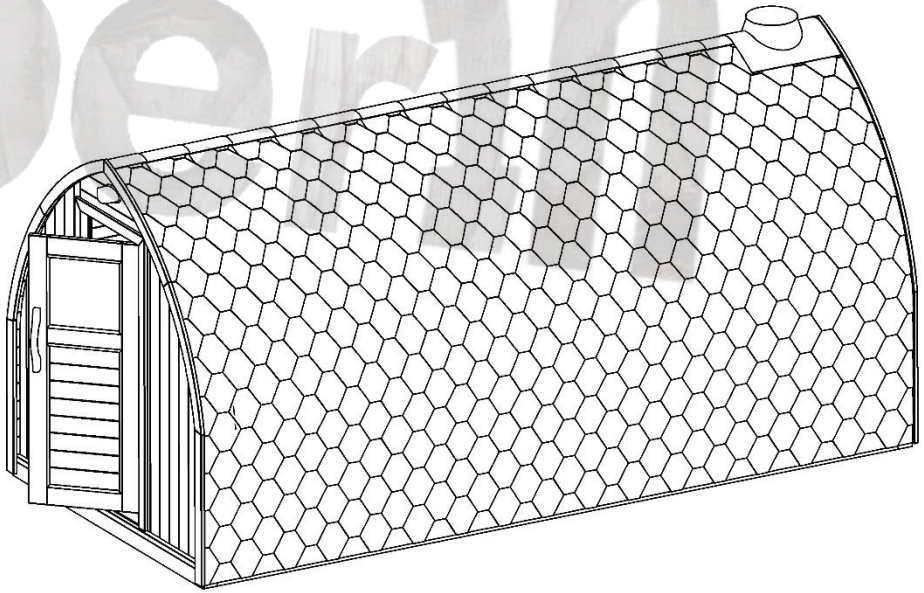

WOOD BURNING HARVIA HEATERS

Recommended for 2 – 4 meter sauna room
Harvia M3 + chimney

The Harvia M3 has a classic design and is suitable for smaller, woodburning saunas. It turns a sauna bath into a pleasurable experience and adds a touch of traditional sauna atmosphere. The even heat and efficient air circulation guarantee an enjoyable bath.

Output 16,5 kW

Stones max. 30 kg

User manual HERE

Recommended for 2 - 4 meter sauna room
Harvia M3 SL + chimney (logs loaded from outside instead of inside)

The SL models are designed for people who want to conveniently heat their sauna from another room or outside the building. SL stoves provide great bathing in small and medium-sized saunas.

Output 16,5 kW

Stones max. 30 kg

User manual HERE

Recommended for 4 – 5 meter sauna room
Harvia 20 PRO + chimney

Harvia 20 Pro gives a good hot bath in medium-sized saunas. It has a big stone space and an air-flow spoiler made of stainless steel. Through the cast-iron glass door the warm glow of the fire adds to the sauna atmosphere.

Output 24,1 kW

Stones max. 40 kg

User manual HERE

Recommended for 4 – 5 meter sauna room
Harvia 20 SL + chimney (logs loaded from outside instead of inside)

The SL models are designed for people who want to conveniently heat their sauna from another room or outside the building. SL stoves provide great bathing in small and medium-sized saunas.

Output 24,1 kW

Stones max. 40 kg

User manual HERE

WOOD BURNING HARVIA HEATER SAFETY DISTANCES APPLIED IN TIMBERIN SAUNAS ACCORING TO OFFICIAL HARVIA HEATERS SAFETY REQUIREMENTS

HARVIA M3 / HARVIA M3 SL:

- Walls and benches made of inflammable materials. The minimum safety distances to inflammable materials:
  - on either side – 25 cm (B),
  - behind the stove – 30 cm (C), *due to installed cetris panel behind the heater the distance can be minimized,*
  - in the front – approx. 30 cm (D).
- Heater ground area is covered with cetris panel.

Harvia 20 PRO / Harvia 20 SL:

- Walls and benches made of inflammable materials. The minimum safety distances to inflammable materials:
  - on either side – 30 cm (B),
  - behind the stove – 30 cm (C), *due to installed cetris panel behind the heater the distance can be minimized,*
  - in the front – approx. 30 cm (D).
- Heater ground area is covered with cetris panel.

SAUNA CHIMNEY:

- Non insulated chimney min. 50 cm from inflammable materials (*side materials can be cover with cetris panel to reduce the distance*).
- Insulation between roof and insulated chimney min. 10 cm.
- Chimney insulation going down from the roof min. 43 cm.

	A min.	B min.	C min.	D min.
M1, M2, M3/SL, Classic 140	1200	250	300	300
20 Pro, 20 SL/Duo, 20 ES Pro/S, 20 Boiler, 20 SL Boiler, Premium/VS, Classic 220/Duo, 20 RS/LS Pro	1300	300	300	300
26 Pro, Classic 280	1280	375	375	375
36, 36 Duo	1250	500	500	500
Linear 16, 16	1300	300	350	400
Linear 22, 22/S, Linear 22 RS/LS/ES, 22 RS/LS/ES S	1265	400	380	500
Linear 28	1380	400	400	500

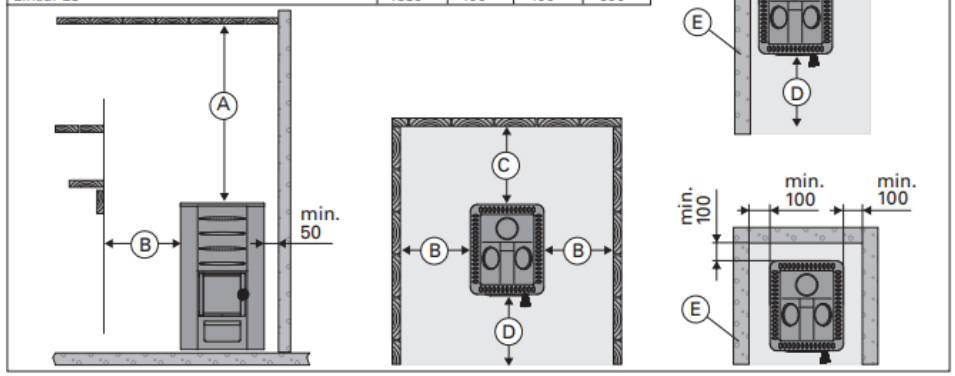

Figure 1 Safety distances (all dimensions in millimeters)

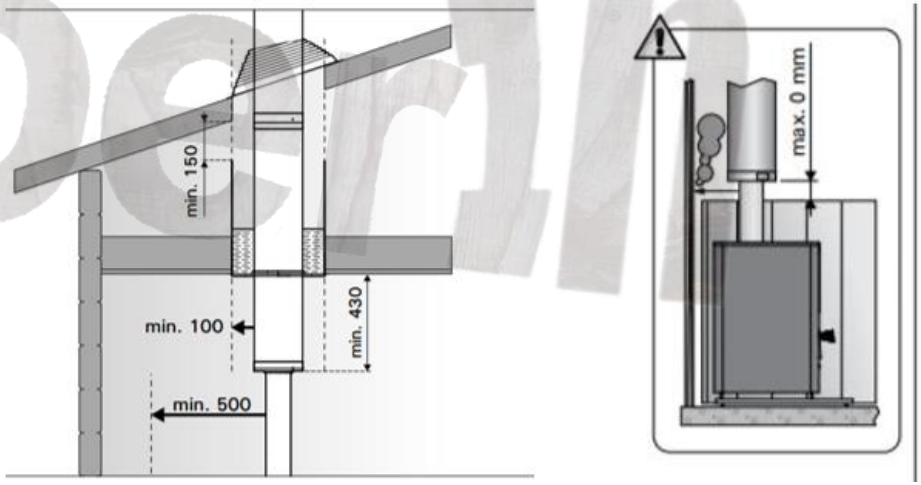

Figure 2 Safety distances for chimney (all dimensions in millimeters)

ELECTRIC HARVIA HEATERS

Recommended for 2 – 3 meter sauna room Cilindro 9 kW, PC90 with integrated control or PC90XW with Wi-Fi	Recommended for 4 – 5 meter sauna room Harvia Legend PO110FC with a digital Fenix Wi-Fi control panel
 Harvia Cilindro electric heater's massive sauna stone amount provides enjoyable sauna bath. Cilindro has an apertured outer casing made of stainless steel. You can adjust the nature of the heat from soft to sharp by throwing water either to the side of the heater or straight on top of the stone pillar. **Output 9 kW** **Stones max. 80 kg** **User manual HERE**	 Harvia Legend is a black pillar heater with a rustic look. Water poured on top gives intense steam, on the sides a softer one. Stainless steel air channels heat the sauna fast and evenly. Supplied with the Fenix Wi-Fi control panel (400 V). **Output 10.8 kW** **Stones max. 100 kg** **User manual HERE**

iMberin

CROSS SECTION OF THE CONSTRUCTION

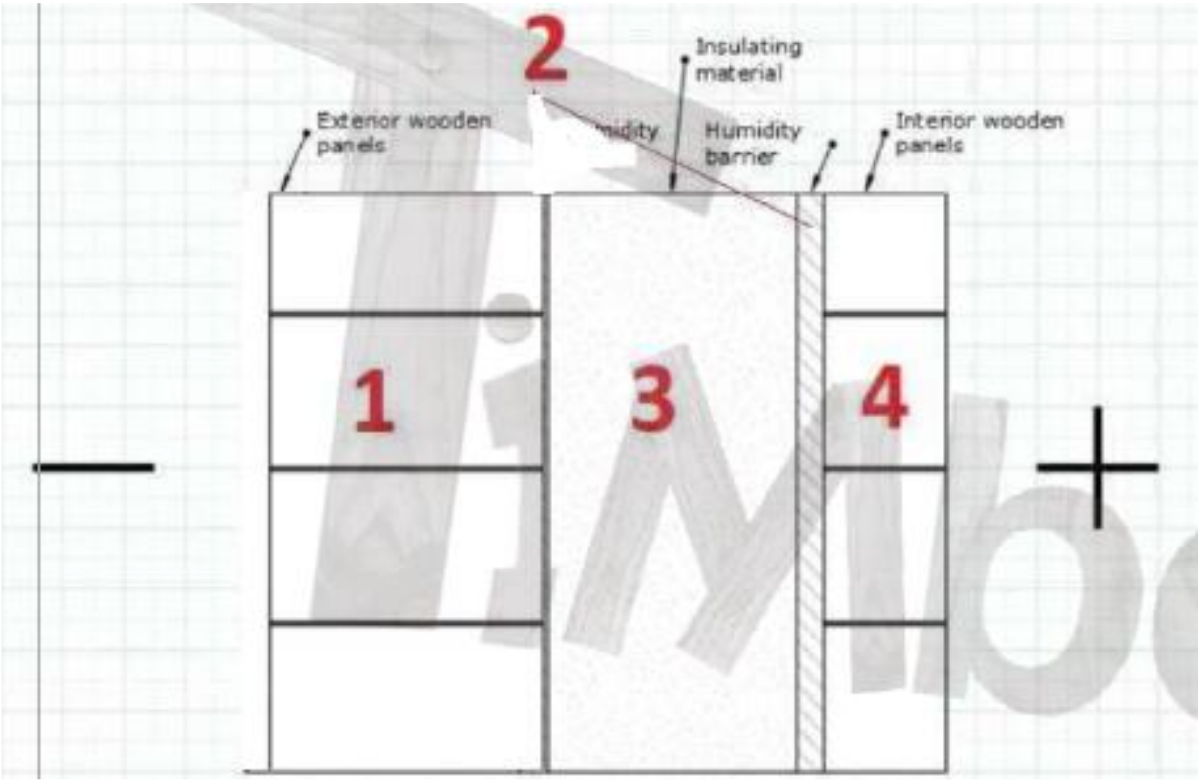

THE CROSS-SECTION VIEW OF INSULATED OUTDOOR SAUNA`S WALL

The first one (1) represents the wooden staves (~40 mm thick (RAW UNTREATED STAVES ~44 mm). Vertical (front-rear-partition) walls ~35 mm thick.

The second one (2) – humidity barrier. The main aim of the humidity barrier is to eliminate the penetration of water or vapor to the insulation layer (3).

The nature of humidity barrier from outside and inside is different. The outside layer waterproofs the insulation and the inside humidity barrier does not allow the vapor to penetrate to the insulation layer. They both are very thin therefore their thickness is not mentioned.

The fourth (4) and the last layer is interior wooden panels, they are 20 mm of thickness. They are needed to support the insulation layer. It must be noted that the humidity barrier from the outside does not necessarily always have to be there. It depends on the type of sauna. The external wooden panels which form the wall of sauna are usually covered with bituminous shingles which act as waterproofing layer as well.

If you need more information then check our article HERE

PANORAMIC WINDOW TYPES

STANDARD WINDOW

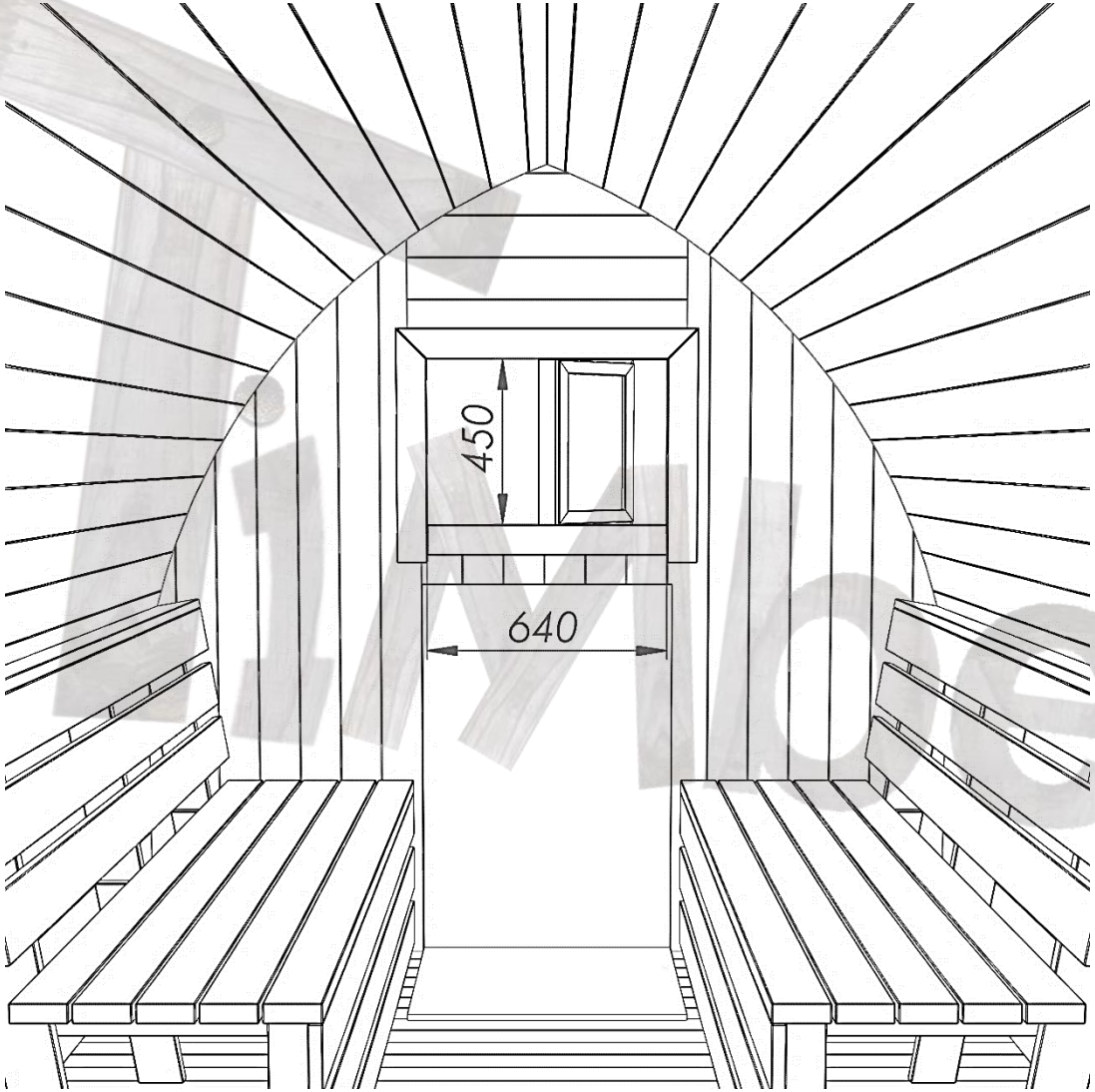

STANDARD WINDOW
Height: 450 mm Width: 640 mm

**Please note that the manufacturer depending on the model might install wooden edges for decorative / constructional purposes.

PANORAMIC WINDOW (GLASS AREA 50%)

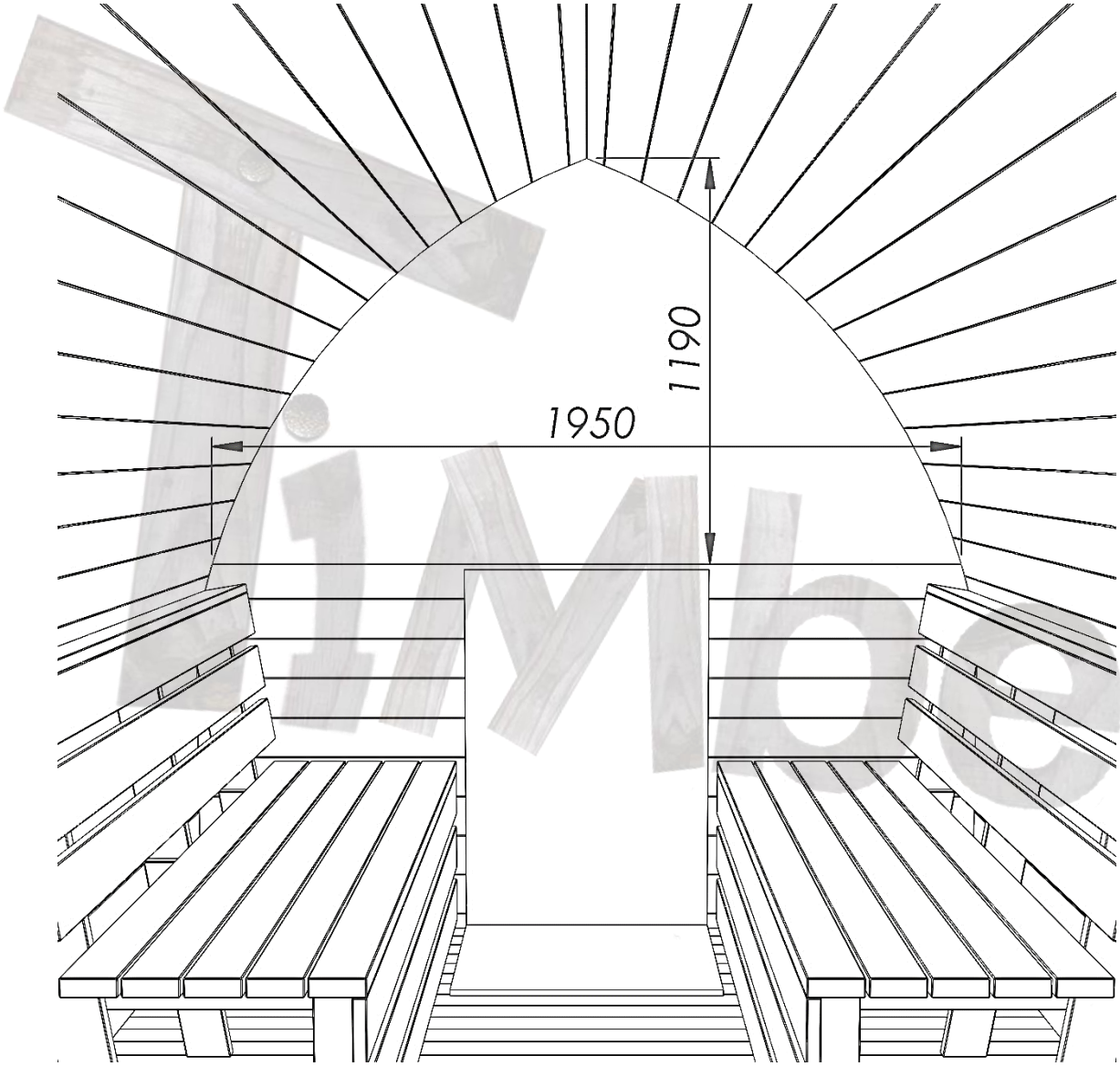

PANORAMIC WINDOW (GLASS AREA 50%)
Height: 1190 mm Width: 1950 mm

**Please note that the manufacturer depending on the model might install wooden edges for decorative / constructional purposes.

PANORAMIC WINDOW (GLASS AREA 80%)

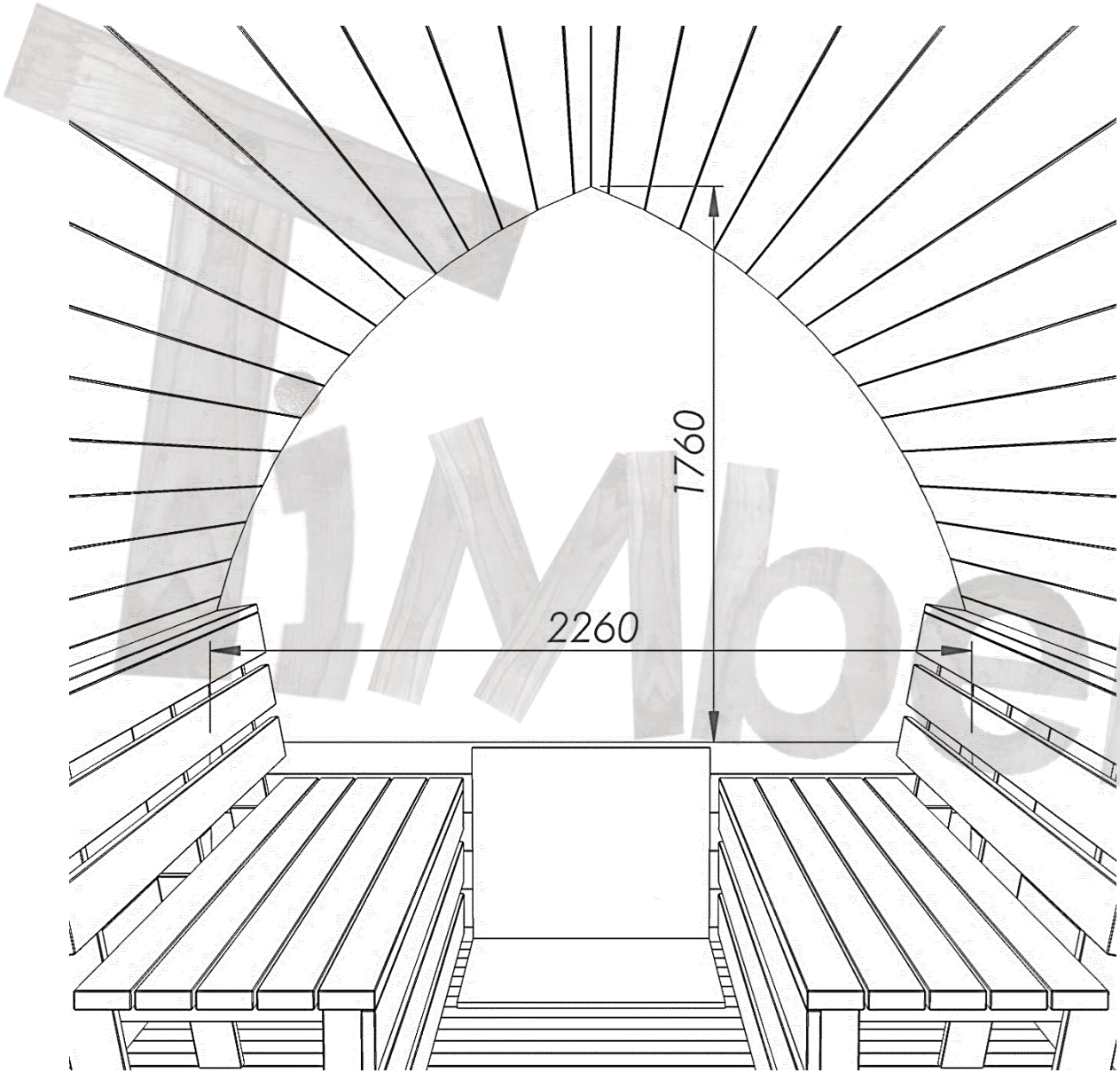

PANORAMIC WINDOW (GLASS AREA 80%)
Height: 1760 mm Width: 2260 mm

**Please note that the manufacturer depending on the model might install wooden edges for decorative / constructional purposes.

PANORAMIC WINDOW (GLASS AREA 100%)

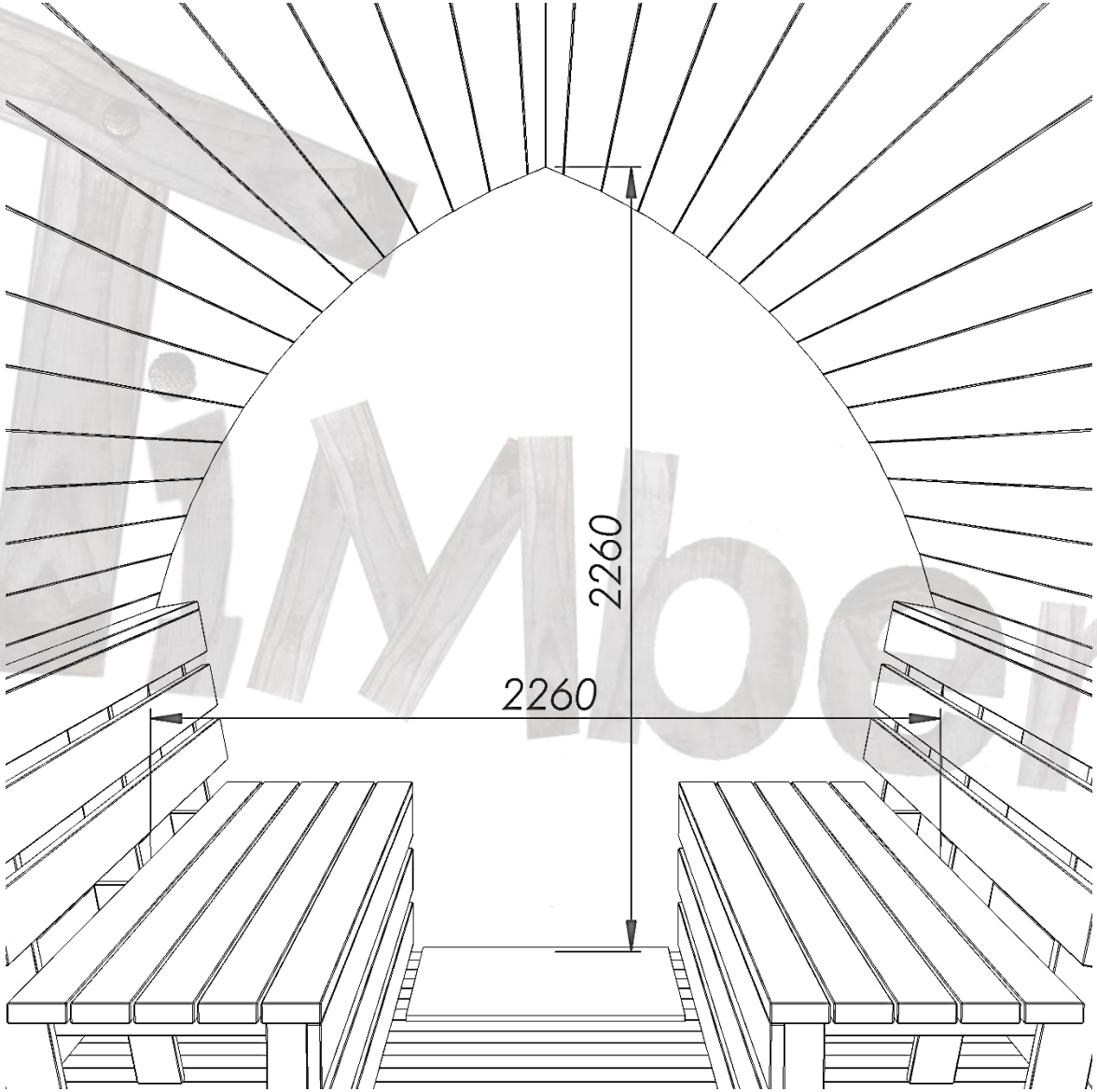

PANORAMIC WINDOW (GLASS AREA 100%)
Height: 2260 mm Width: 2260 mm

**Please note that the manufacturer depending on the model might install wooden edges for decorative / constructional purposes.